KOHLER®
SERVICE PARTS

MASTERSHOWER™
3-WAY DIVERTER VALVE

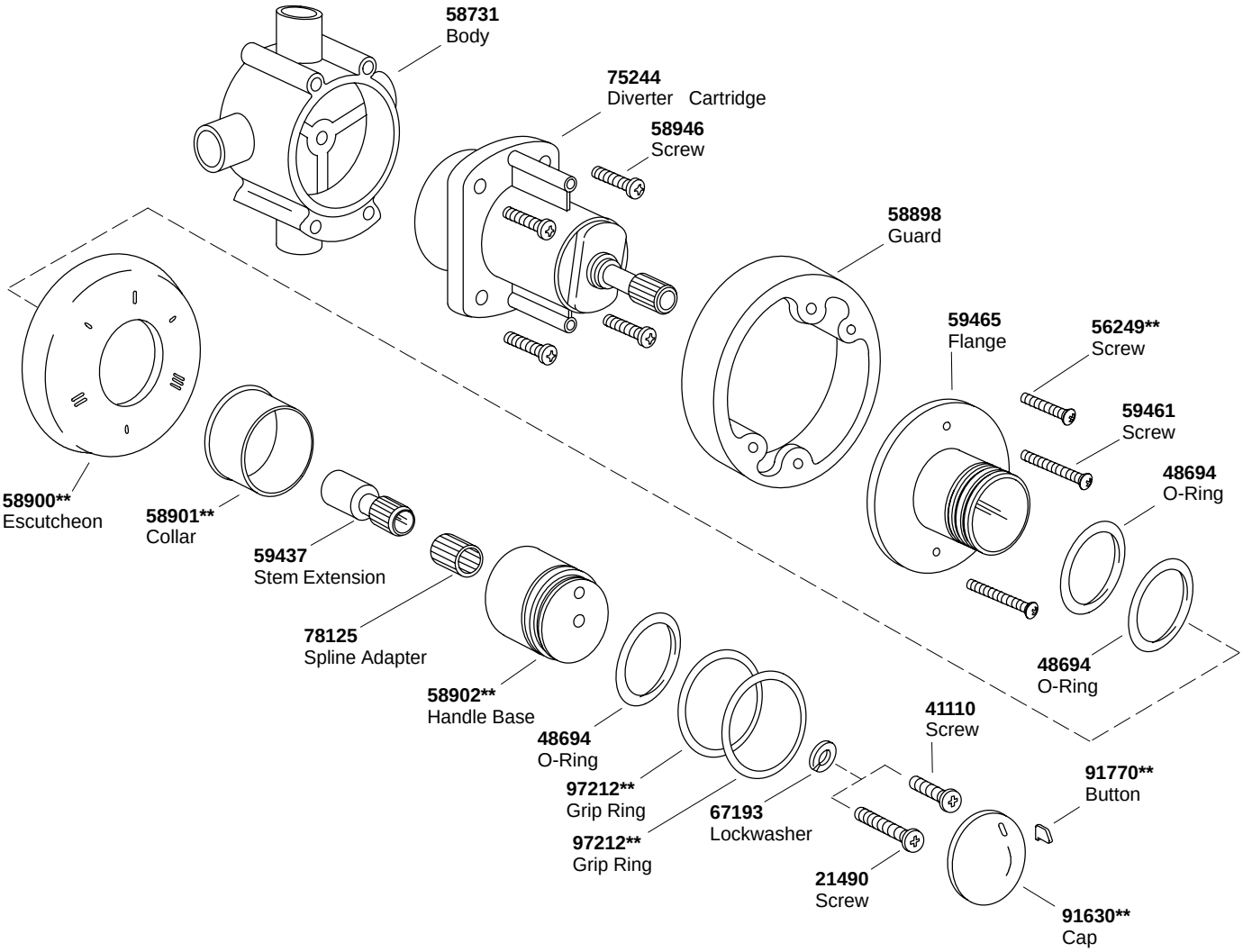

****Finish/color code must be specified when ordering.**