	STATE PROJECT	PARISH	SHEET NO.

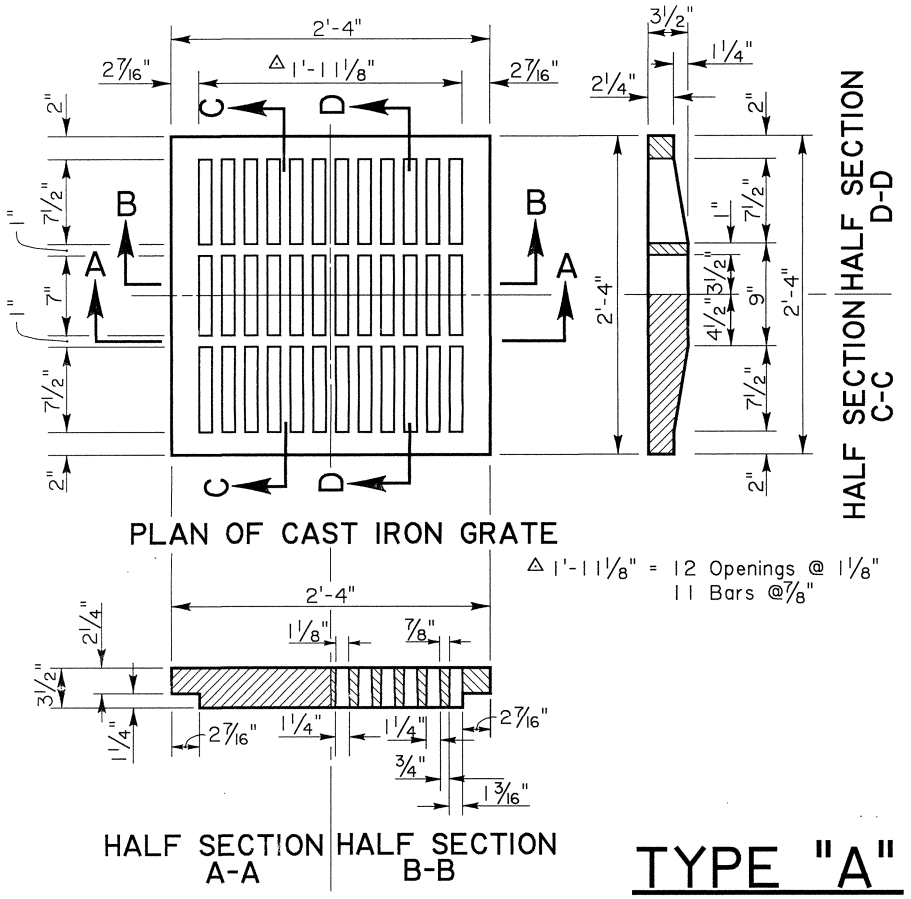

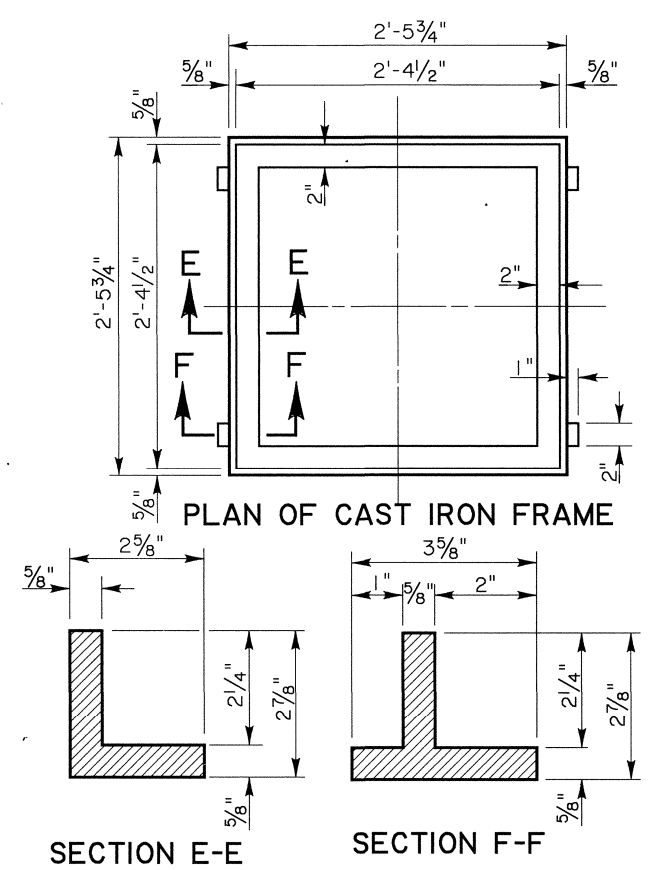

TYPE "A"

DETAILS OF CAST IRON GRATE & FRAME

Notes: 1. Weight of Cast Iron Grate = 334lbs
2. Weight of Cast Iron Frame = 90lbs

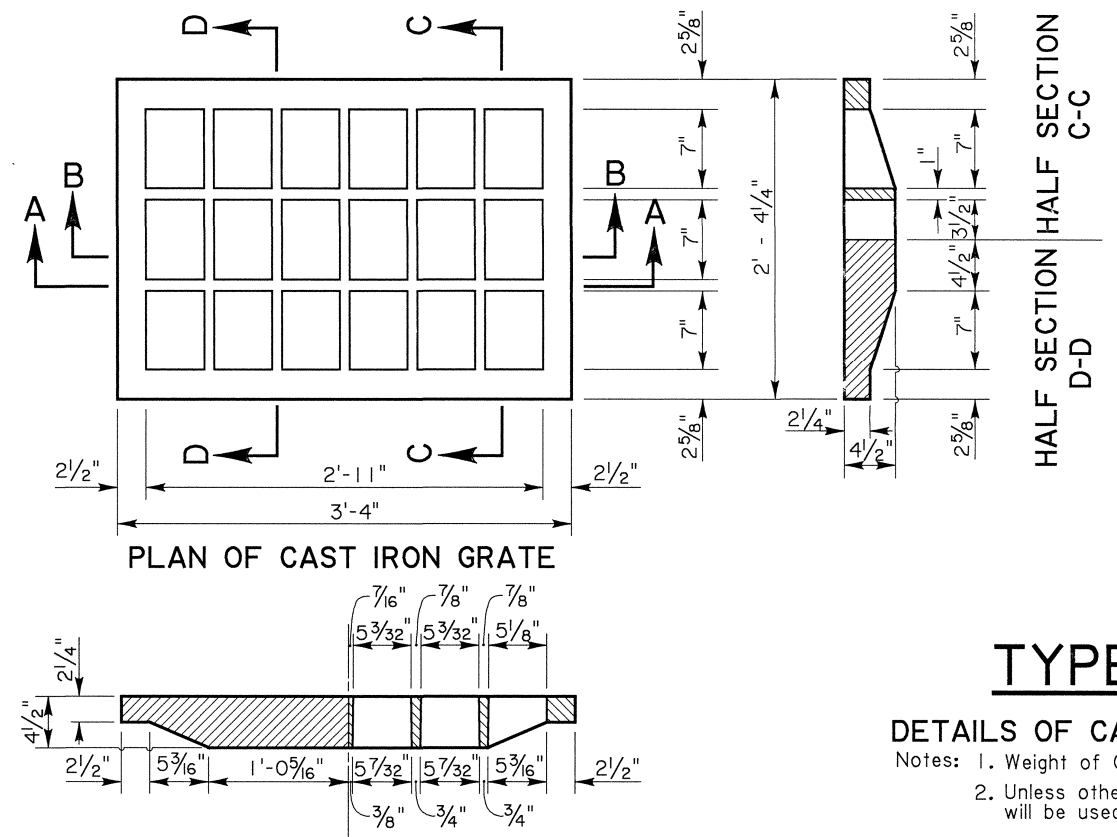

TYPE "B"

DETAILS OF CAST IRON GRATE

Notes: 1. Weight of Cast Iron Grate = 350lbs
2. Unless otherwise stated, TYPE "E" frame will be used with this Grate.

TYPE "C"

Notes: 1. Grates to be galvanized after fabrication.
2. Unless otherwise stated, TYPE "E1" Frame is to be used with these grates. (See Sheet 2)
3. Supplier of Grate also is to furnish Pre-Fitted Grate Frame.

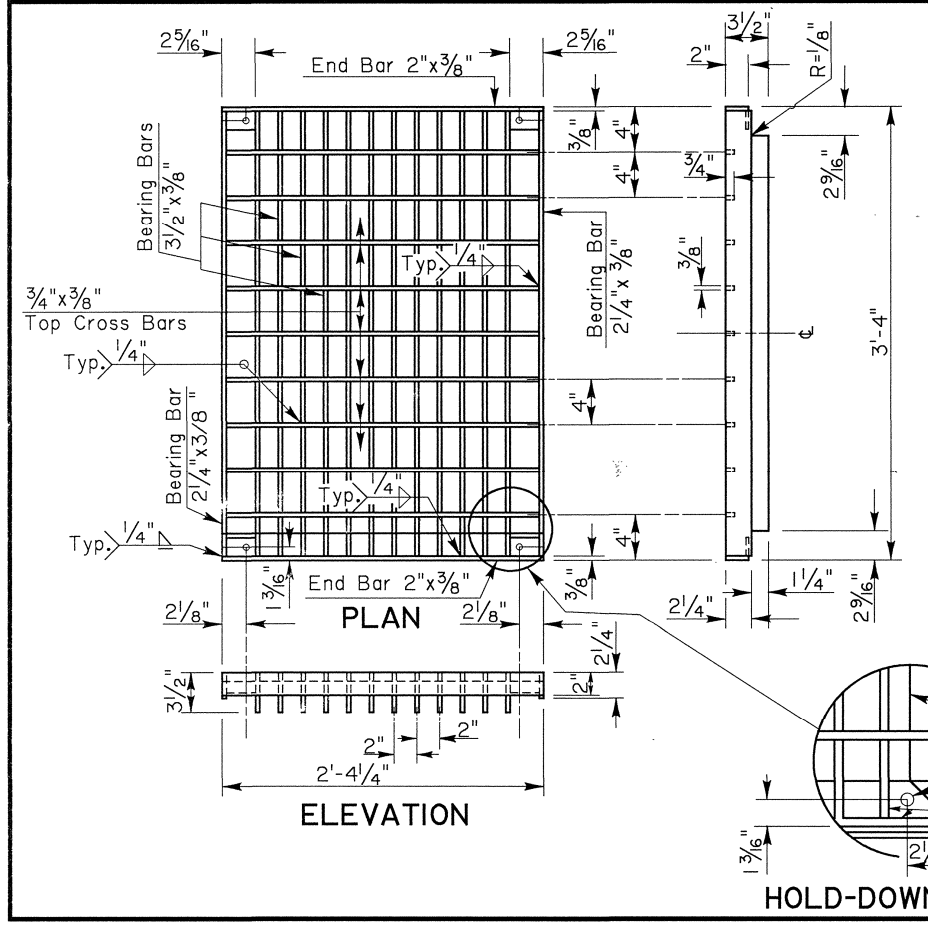

DETAILS OF WELDED & SEALED DRAIN GRATE

Continuous Weld for full depth each Bearing Bar to End Bars and Cross Bars.

All Bearing Bars to be set flush on Grate Frame.

Weight of Drain Grate = 233 lbs.± 5%

DETAILS OF RIVETED RETICULINE DRAIN GRATE ALTERNATE

Continuous Weld for full depth each Bearing Bar to End Bars.

All Bearing Bars to be set flush on Grate Frame.

Center to Center of Bearing Bars equal 2 5/16" plus Bearing Bar Thickness.

Weight of Drain Grate = 266 lbs.± 5%

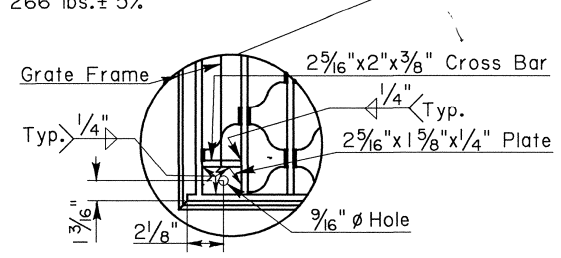

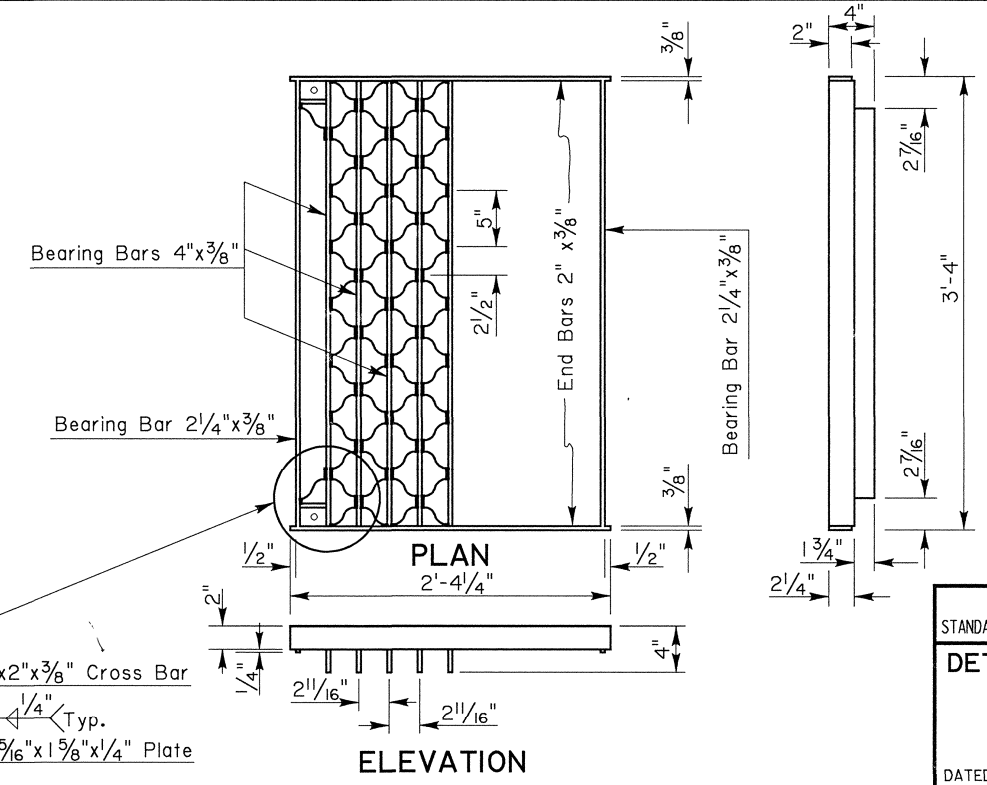

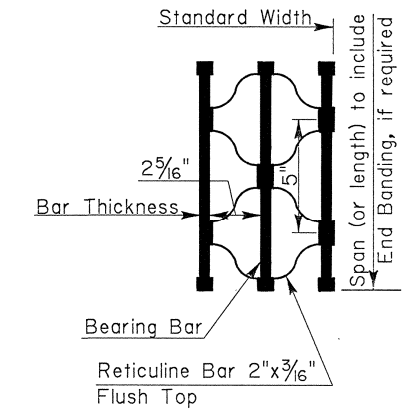

DRAIN GRATE DETAIL (ALTERNATE)

DATE	DESCRIPTION	BY
9-26-94	General Revisions-Delete Types G,J,L,M,O	JCM
8-25-80	Added Type "N" & "O" on Sht. 5	WTJ
2-10-78	Revised Note Type C - Anchor Type E & E1	WTJ

REVISIONS

STANDARD PLAN NO. MC-01 — SHEET 1 OF 5

DETAILS OF GRATES, GRATE FRAMES AND COVERS FOR CATCH BASINS AND MANHOLES

DATED AUG. 15, 1977

STATE OF LOUISIANA
DEPARTMENT OF TRANSPORTATION AND DEVELOPMENT

DESIGNED	DETAILED	DIR. /dgn/stdplans/
CHECKED	CHECKED	FILE 1mc01.dgn

APPROVED BY CHIEF ENGINEER Original Signed by Chief Engineer

r:/dgn/stdplans/1mc01.dgn