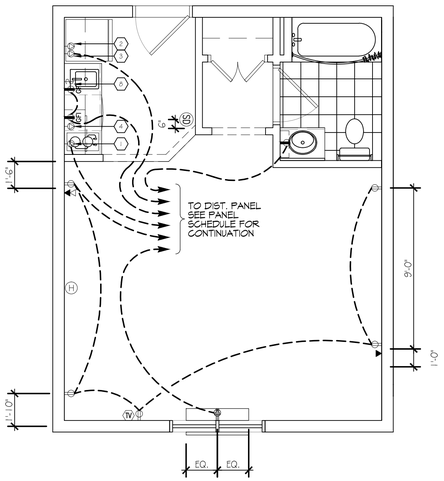

4 KING SUITE LARGE (POWER)
SCALE: 1/4"=1'-0"

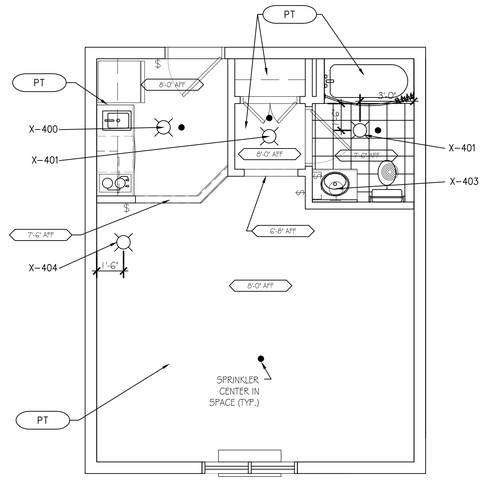

3 KING SUITE LARGE (LIGHTING)
SCALE: 1/4"=1'-0"

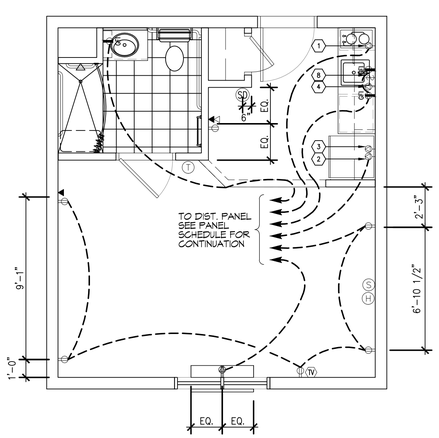

4 ACCESIBLE ONE BEDROOM SUITE (POWER)
SCALE: 1/4"=1'-0"

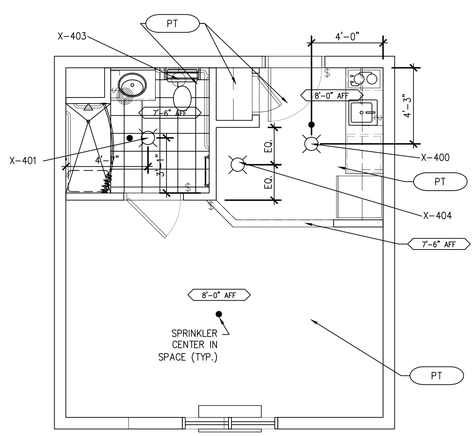

3 ACCESSIBLE ONE BEDROOM SUITE (LIGHTING)
SCALE: 1/4"=1'-0"

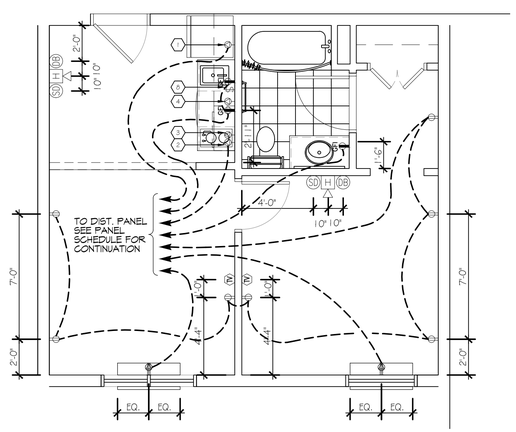

2 ACCESSIBLE ONE BEDROOM SUITE (POWER)
SCALE: 1/4"=1'-0"

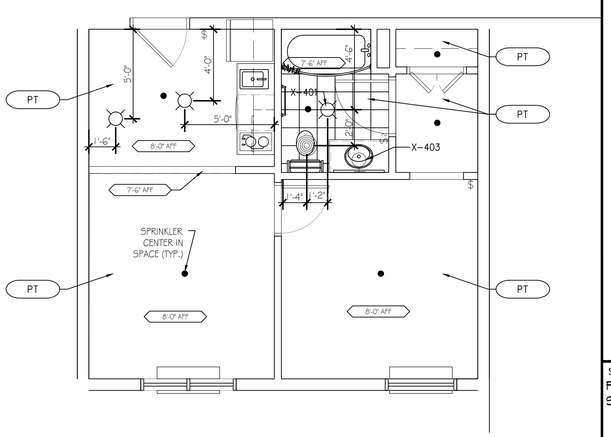

1 ACCESSIBLE ONE BEDROOM SUITE (LIGHTING)
SCALE: 1/4"=1'-0"

DAMMON ENGINEERING, INC.
LOUISIANA & MISSISSIPPI
www.dammonengineering.com
info@dammonengineering.com
PH: 985.649.5832 F: 985.641.5950
Chief Engineer: Brian Mestich, PE
554 Old Spanish Trail
Slidell, LA 70458

#	DESCRIPTION	DATE
	REVISIONS	

SEAL:

PRELIMINARY NOT FOR CONSTRUCTION

MAINSTAY SUITES
100 MAIN STREET
LOT 11 LA HWY 21
HACKBERRY, LA 70645

JOB No:	22265
DATE:	FEBRUARY, 2016
DRAWN BY:	JTL
CHECKED BY:	CKD

THIS DOCUMENT, TOGETHER WITH THE CONCEPTS AND DESIGNS PRESENTED HEREIN, AS AN INSTRUMENT OF SERVICE, IS INTENDED ONLY FOR THE SPECIFIC PURPOSE AND CLIENT FOR WHICH IT WAS PREPARED. REUSE OF AND IMPROVEMENTS TO THE PROPERTY BY OWNERS OR OTHERS OTHER THAN THE CLIENT IS PROHIBITED WITHOUT WRITTEN CONSENT OF DAMMON ENGINEERING, INC. ANY REPRODUCTION OF THIS DOCUMENT OR ANY PART THEREOF (INCLUDING BY PHOTOCOPYING OR RECORDING) IS PROHIBITED WITHOUT WRITTEN CONSENT OF DAMMON ENGINEERING, INC. THE INFORMATION RECORDED ON THESE DOCUMENTS (DRAWINGS OR SPECIFICATIONS) PROVIDED TO THE CLIENT IS BELIEVED TO BE THE PROPERTY OF DAMMON ENGINEERING, INC. AND THE CLIENT HEREBY AGREES TO RETURN THE ORIGINAL DOCUMENTS UPON REQUEST. THE CLIENT AGREES THAT THE DOCUMENTS PROVIDED BY DAMMON ENGINEERING, INC. SHALL NOT BE USED FOR ANY PURPOSE OTHER THAN THE PROJECT FOR WHICH THE PLANS WERE PREPARED AND DEVELOPED, WITHOUT WRITTEN CONSENT OF DAMMON ENGINEERING, INC. THE CLIENT AGREES TO INDEMNIFY AND HOLD DAMMON ENGINEERING, INC. HARMLESS FOR ANY REUSE OF THE DOCUMENTS FOR ANY OTHER PURPOSE OR PROJECT.

SHEET TITLE:
POWER & LIGHTING
SUITES

DRAWING NUMBER:

E104

SHEET No: 10 of -