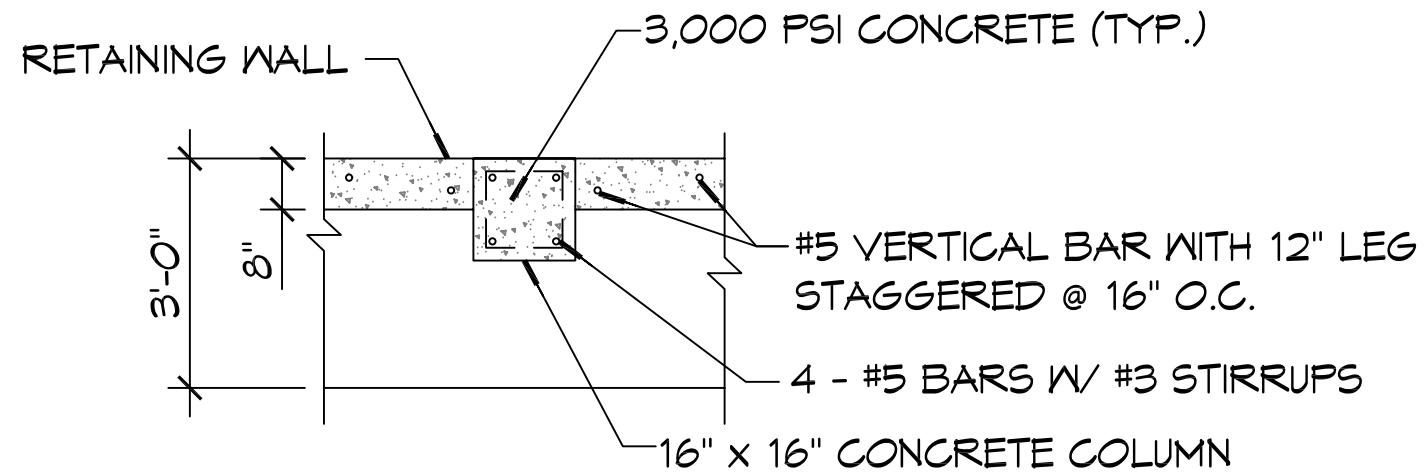

H TYPICAL COLUMN @ 12' O.C.

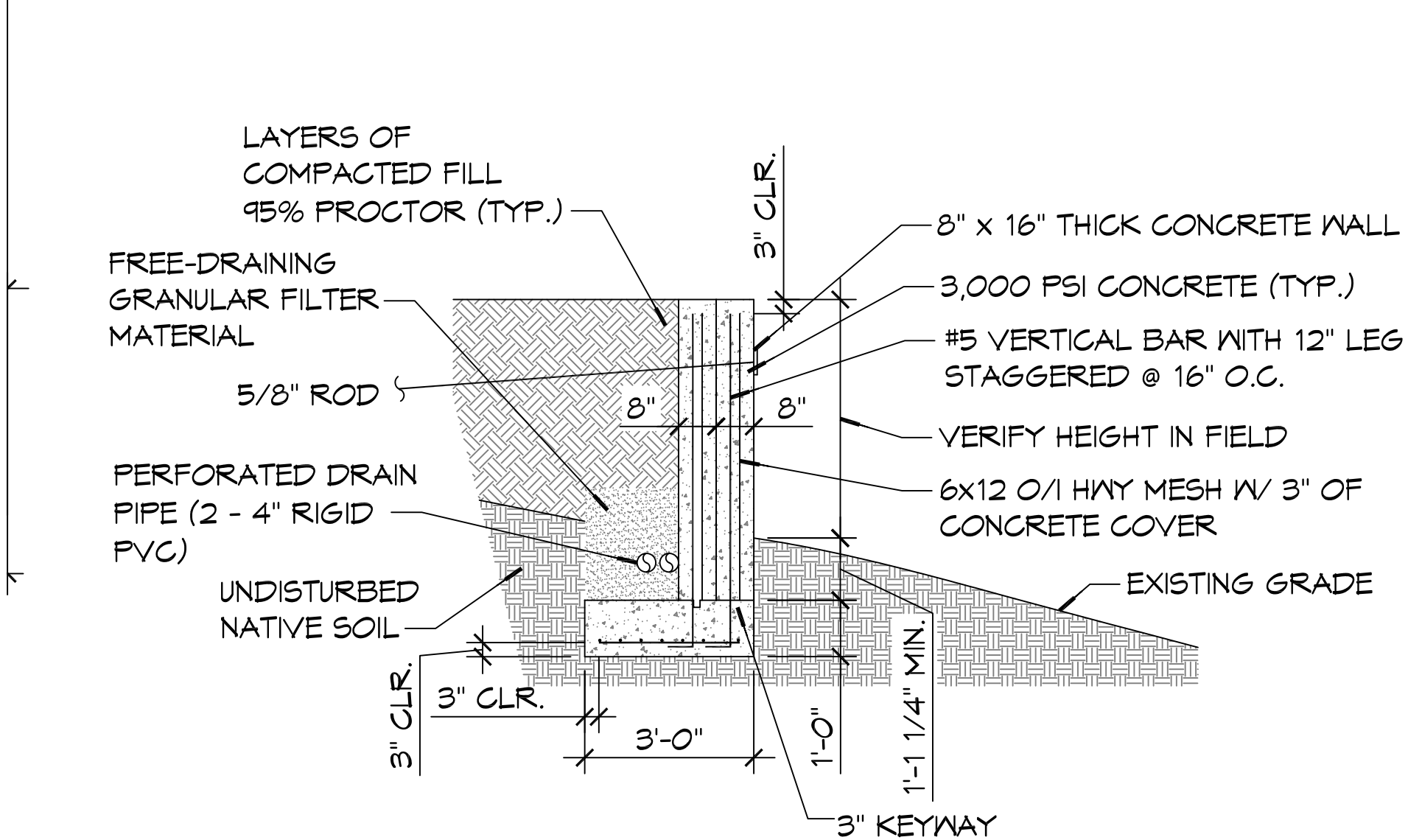

G TYPICAL RETAININGWALL SECTION