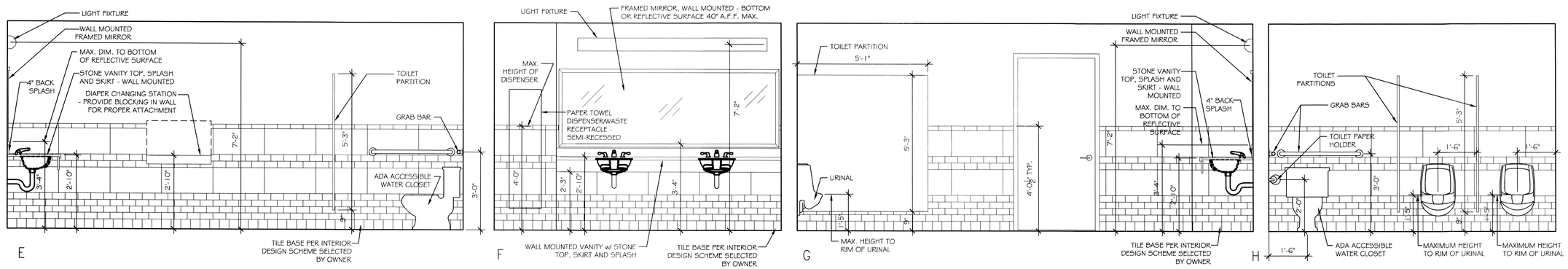

3 INTERIOR ELEVATIONS
SCALE: 1/2"=1'-0"

MENS PUBLIC RESTROOM

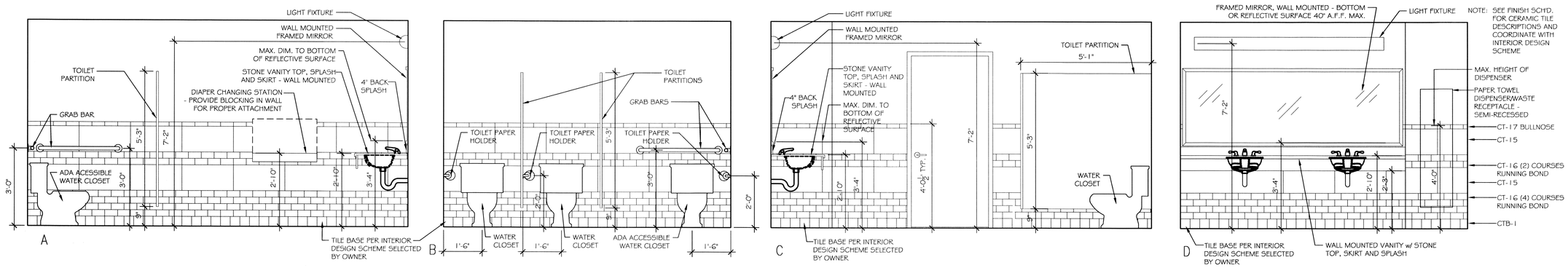

NOTE: SEE FINISH SCHD. FOR CERAMIC TILE DESCRIPTIONS AND COORDINATE WITH INTERIOR DESIGN SCHEME

2 INTERIOR ELEVATIONS
SCALE: 1/2"=1'-0"

WOMENS PUBLIC RESTROOM

NOTE: SEE MAINSTAY SUITES PROTOTYPE DRAWINGS & SPECIFICICATIONS FOR FINISH SCHEDULES & LEGENDS FOR EQUIPMENT & MATERIAL CONTROL NO.S

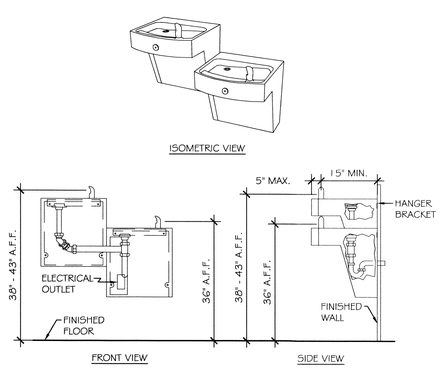

4 ELECTRIC DRINKING FOUNTAINS
SCALE: N.T.S.

IN CORRIDOR AT RESTROOMS

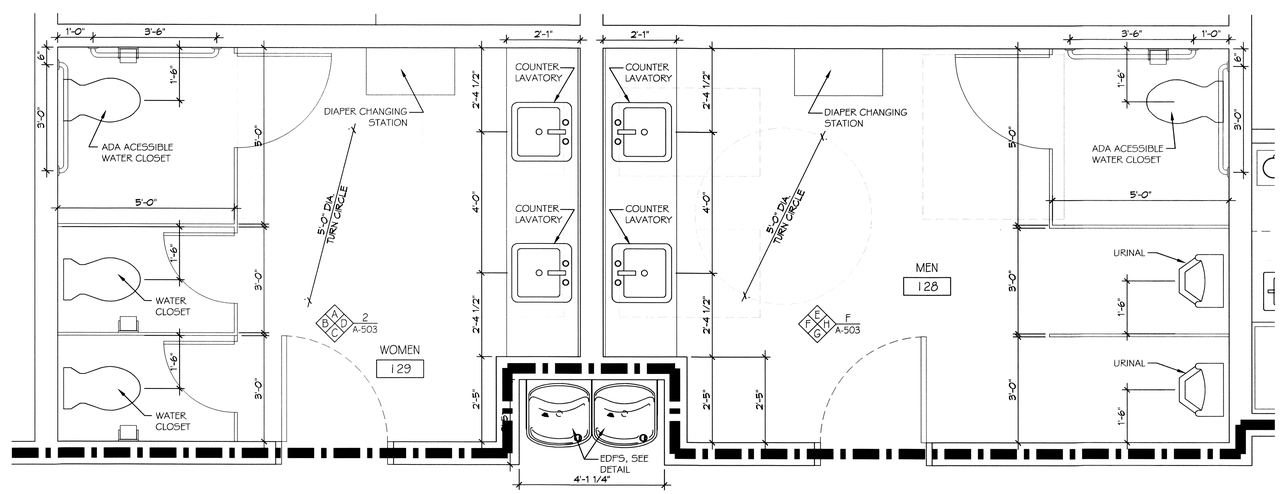

1 ENLARGED PLAN
SCALE: 1/2"=1'-0"

WOMENS & MENS PUBLIC RESTROOMS

DAMMON ENGINEERING, INC.
LOUISIANA & MISSISSIPPI
www.dammonengineering.com
info@dammonengineering.com
PH: 985.649.5832 F: 985.641.5950
Chief Engineer: Brian Mistich, PE
554 Old Spanish Trail
Slidell, LA 70458

REVISIONS

#	DESCRIPTION	DATE

SEAL:

MAINSTAY SUITES
700 MAIN STREET
LOT #1 LA HWY 21
HACKBERRY, LA 70645

JOB No:	22055
DATE:	FEBRUARY, 2016
DRAWN BY:	JTL
CHECKED BY:	JMS

The work shown on this drawing is the property of Dammon Engineering, Inc. Reproduction or publication of this work, in whole or in part, without written consent of the author is prohibited. Ownership of instruments of service shall remain in the property of Dammon Engineering. Any use or re-use by others of the information contained on this drawing, in part or in whole, without written consent of the author is prohibited. Dammon Engineering, Inc. shall not be liable for any damage or injury resulting from such use or re-use.

SHEET TITLE:
PUBLIC RESTROOMS ENLARGED FLOOR PLAN, INTERIOR ELEVATIONS, & DETAILS

DRAWING NUMBER:
A301

SHEET No: 25 of 52

FILE NAME: J:_Hotels-Motels\2255 - Mainstay Suites - Hackberry Louisiana\Drawings\Current Drawings\A301-Enlarged Public Restrooms-Floor & Details.dwg PLOT DATE & TIME: Friday, February 19, 2016 1:37:45 PM