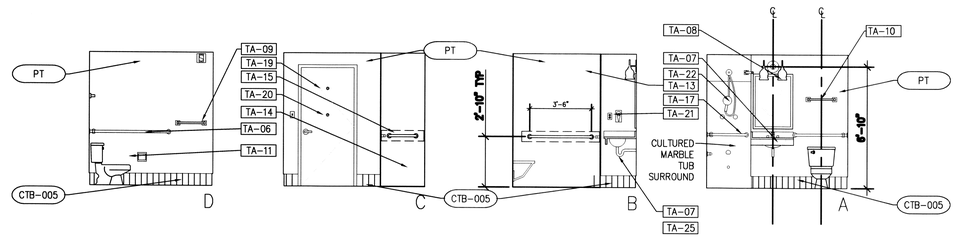

6 INTERIOR ELEVATIONS
SCALE: 1/4"=1'-0"

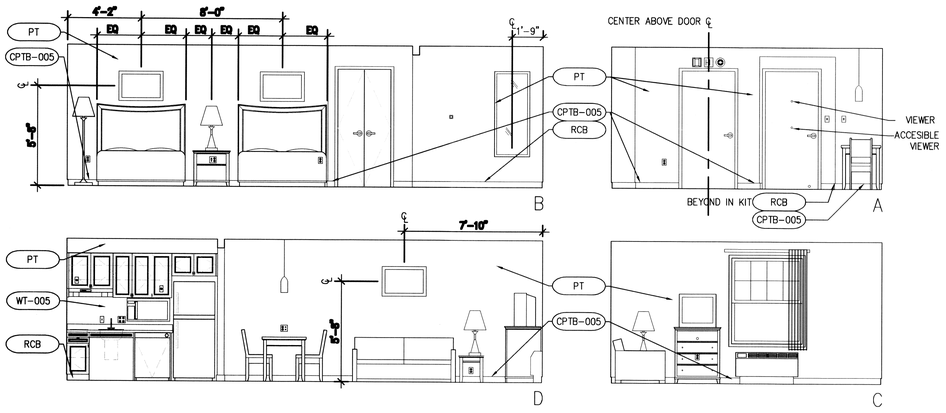

5 INTERIOR ELEVATIONS
SCALE: 1/4"=1'-0"

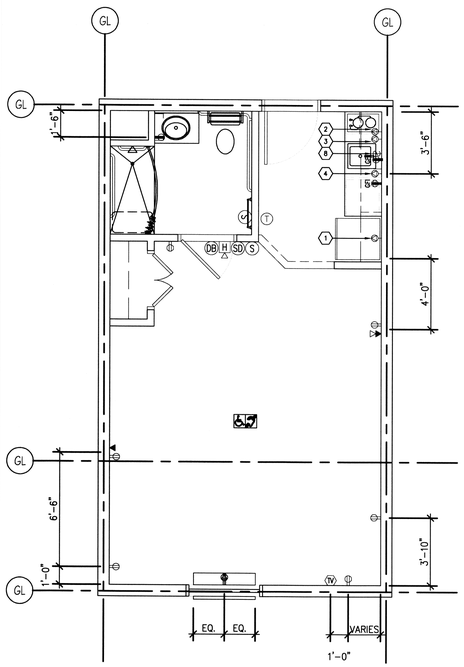

4 ELECTRIC DEVICE PLAN
SCALE: 1/4"=1'-0"

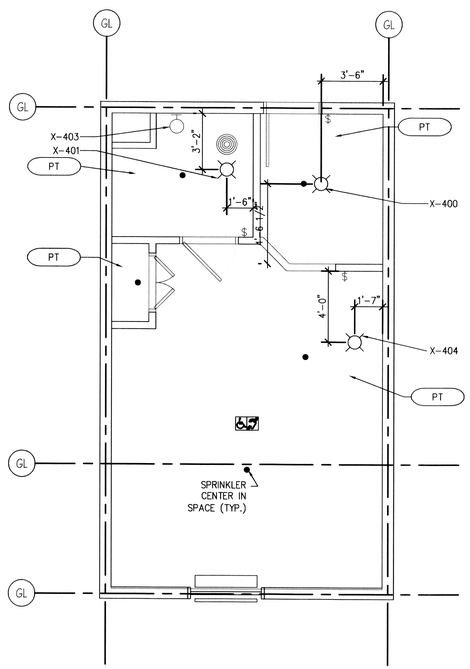

3 REFLECTED CEILING PLAN
SCALE: 1/4"=1'-0"

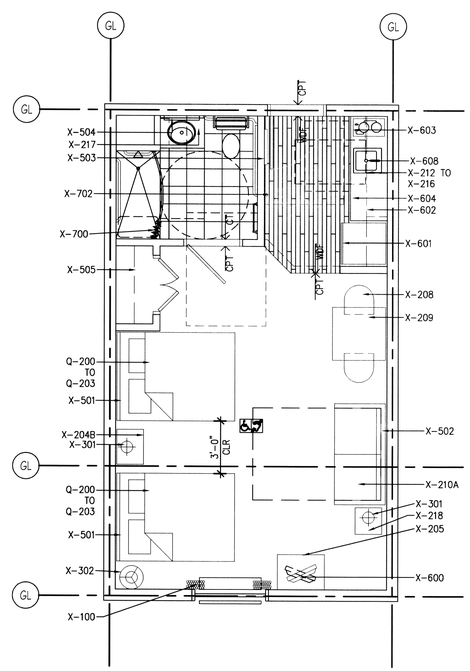

2 FLOOR FINISH/FFE PLAN
SCALE: 1/4"=1'-0"

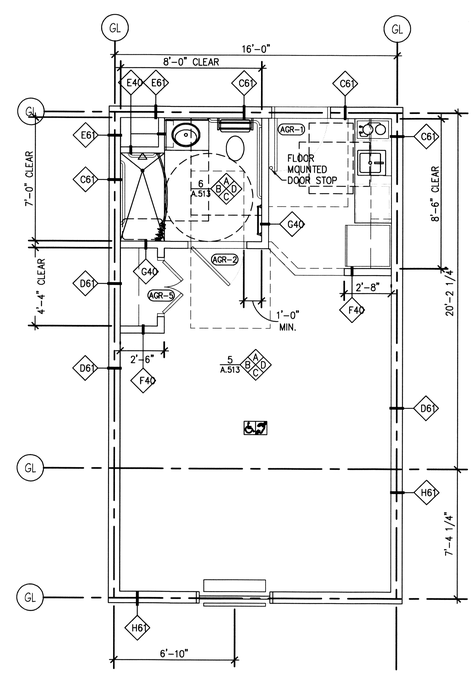

1 ARCHITECTURAL FLOOR PLAN
SCALE: 1/4"=1'-0"

GUESTROOM GENERAL NOTES

1. REFER TO 1/8" FLOOR PLANS FOR OVERALL GUESTROOM AND WINDOW DIMENSIONS, UNO.
2. GRID LINES ARE LOCATED AT THE CENTERLINE OF STUDS.
3. OVERALL ROOM DIMENSIONS ARE FROM CENTERLINE OF STUD TO CENTERLINE OF STUD. INTERIOR DIMENSIONS ARE FROM FACE OF FINISH TO FACE OF FINISH, UNO.
4. FOR DETAILED ELEVATIONS & SECTIONS OF KITCHEN CABINETS, BATHROOM CABINET, & DRESSING ROOM CLOSET SYSTEM, REFER TO SHEET A.702, A.703.
5. PLUMBING CHASE SHALL HAVE A FIRESTOP AT EACH FLOOR
6. MAINTAIN, BY CODE, MINIMUM REQUIRED SEPARATION BETWEEN GUESTROOMS AT PLUMBING CHASE WALLS.

GUESTROOM CEILING NOTES

1. TYPICAL CEILING FINISH HEIGHT SHALL BE 8'-0" CLEAR AFF(FLOORS 1 THROUGH 3) , UNO. 9'-0" FOURTH FLOOR HEIGHT.
2. TYPICAL CEILING FINISH HEIGHT FOR BATHROOMS AND DRESSING ROOMS SHALL BE 7'-6" CLEAR AFF, UNO.
3. TYPICAL CEILING FINISH FOR BEDROOMS, LIVING ROOMS, AND DRESSING ROOMS SHALL BE TEXTURED PAINTED GYP BD, UNO.
4. TYPICAL CEILING FINISH FOR BATHROOMS AND KITCHENS SHALL BE SMOOTH PAINTED GYP BD, UNO.
5. SOFFITS SHALL BE SMOOTH PAINTED FINISH ON GYP BD.
6. CENTER SINGLE SURFACE MOUNTED LIGHT FIXTURES IN CEILING, UNO.
7. CENTER SPRINKLER HEADS IN SPACES.

AREA	WALLS	TRIMS	DOORS	FLOORS	COMMENT	BASE	CEILING	OTHER
GUESTROOM	VYL-005	PT-005	PT-005	CPT-005	USE CPAD-005	CPTB-005		
KITCHEN	VYL-005			WDF-005		RCB-005		
BATHROOM	VYL-006	PT-005	PT-005	CT-005		CTB-005		

GENERAL FINISH NOTE: REFER TO RCP FOR CEILING FINISH. REFER TO FF&E PLAN FOR FLOOR FINISH. REFER TO INTERIOR ELEVATIONS FOR WALL FINISH.

LIGHT & POWER SYMBOLS LEGEND

	CEILING MOUNTED LIGHT FIXTURE
	PENDANT LIGHT FIXTURE
	FLOOR LAMP
	DESK/TABLE LAMP
SD	SMOKE DETECTOR
DB	DOOR BELL w/ LIGHT (HEARING IMPAIRED ROOMS)
TV	CABLE TV CONNECTION
	TELEPHONE CONNECTION
	COMPUTER/DATA OUTLET
T	THERMOSTAT
	EXHAUST FAN
	DUPLEX RECEPTACLE
	QUADPLEX RECEPTACLE
	G.F.I. RECEPTACLE
	SPECIAL RECEPTACLE
	PTAC RECEPTACLE
	DUPLEX RECEPTACLE & TELEPHONE OUTLET W/ COMMON PLATE
	DUPLEX RECEPTACLE, TEL/COMP DATA OUTLET WITH COMMON PLATE
$	GFI RECEPTACLE/SINGLE POLE SWITCH WITH COMMON PLATE
$	SINGLE POLE SWITCH
$2	DOUBLE POLE SWITCH
$3	THREE WAY SWITCH
$4	FOUR WAY SWITCH
$OC	WALL MOUNTED OCCUPANCY SENSOR W/ SWITCH

TOILET & BATH ACCESSORY SCHEDULE

ITEM#	DESCRIPTION	LOC.
TA-05	TOILET	PRR, GR ADA GR.
TA-06	CONTINUOUS TOILET GRAB BAR (SURFACE MOUNTED)	GR & ADA GR.
TA-07	SINK / CASEWORK (MOUNTING HEIGHT)	GR & ADA GR.
TA-08	MIRROR, SURFACE MOUNTED (BOTTOM @ 40" AFF)	GR & ADA GR.
TA-09	TOWEL BAR (24"L @ 54" AFF 24" @ 42") SURFACE MOUNTED	GR & ADA GR.
TA-10	TOWEL BAR (16"L @ 54" AFF) SURFACE MOUNTED	GR & ADA GR.
TA-11	TOILET TISSUE DISPENSER (SINGLE ROLL / RECESSED)	PRR, GR & ADA GR.
TA-12	TUB GRAB BAR, SURFACE MOUNTED (NON-HANDICAPPED)	GR
TA-13	CURVED SHOWER CURTAIN ROD, SURFACE MOUNTED, (MOUNTING HEIGHT = SEE SCHEDULE)	GR & ADA GR.
TA-14	FOLDING SHOWER SEAT, SURFACE MOUNTED	ADA GR.
TA-15	12" TUB GRAB BAR (HEAD END, SURFACE MTD)	ADA GR.
TA-16	24" TUB GRAB BAR, 2 REQ'D (SIDE WALL, SURFACE MTD.)	ADA GR.
TA-17	24" TUB GRAB BAR (DRAIN END, SURFACE MTD)	ADA GR.
TA-18	SHOWER GRAB BARS SURFACE MOUNTED	ADA GR.
TA-19	ROBE/COAT HOOK	GR.
TA-20	ROBE/COAT HOOK 48"	ADA GR.
TA-21	HAIR DRYER	GR & ADA GR.
TA-22	SHWR HEAD & CONTROLS (MOUNTING HEIGHT = SEE SCHED)	GR.
TA-23	SHWR HEAD & CONTROLS (MOUNTING HEIGHT = SEE SCHED)	ADA GR.
TA-24	CULTURED SHELF 24"	GR.
TA-25	SOAP DISH 42"	GR & ACC GR.

TOILET/BATH ACCESSORY NOTES:

1. PRR = PUBLIC RESTROOM
   GR = GUESTROOM
   ADA GR = ACCESSIBLE GUESTROOM

DAMMON ENGINEERING, INC.
LOUISIANA & MISSISSIPPI
www.dammonengineering.com
info@dammonengineering.com
PH: 985.649.5832 F: 985.641.5950
Chief Engineer: Brian Mistich, PE
554 Old Spanish Trail
Slidell, LA 70458

REVISIONS

#	DESCRIPTION	DATE

SEAL:

JARED M. SIMONEAUX REG. NO. 7331 STATE OF LOUISIANA REGISTERED ARCHITECT

MAINSTAY SUITES
705 MAIN STREET
LAKE CHARLES
HACKBERRY, LA 70645

JOB No: 2265 DATE: FEBRUARY, 2016
DRAWN BY: JTL CHECKED BY: JMS

SHEET TITLE:
ACCESSIBLE DOUBLE QUEEN SUITE DETAILS

DRAWING NUMBER:
A310

SHEET No: 34 of 52