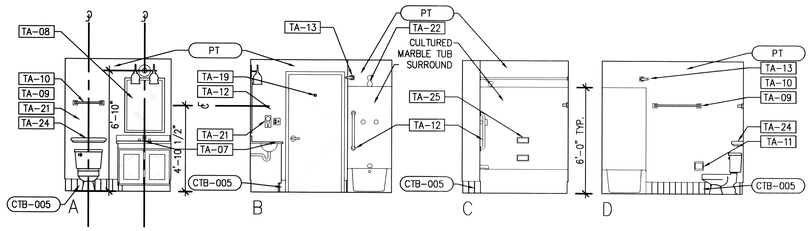

6 INTERIOR ELEVATIONS
SCALE: 1/4"=1'-0"

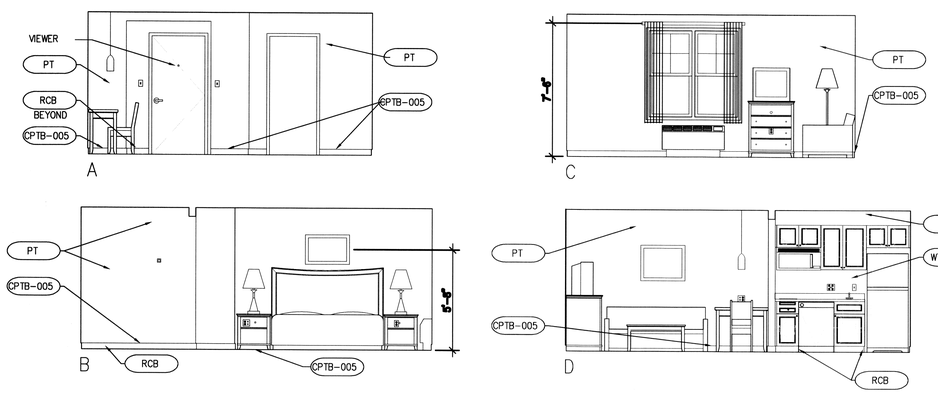

5 INTERIOR ELEVATIONS
SCALE: 1/4"=1'-0"

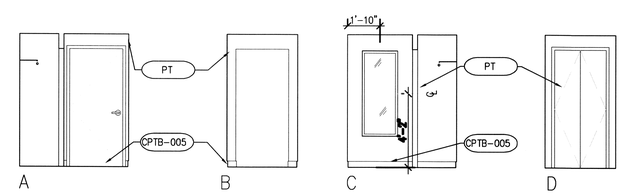

7 INTERIOR ELEVATIONS
SCALE: 1/4"=1'-0"

GUESTROOM GENERAL NOTES

1. REFER TO 1/8" FLOOR PLANS FOR OVERALL GUESTROOM AND WINDOW DIMENSIONS, UNO.
2. GRID LINES ARE LOCATED AT THE CENTERLINE OF STUDS.
3. OVERALL ROOM DIMENSIONS ARE FROM CENTERLINE OF STUD TO CENTERLINE OF STUD. INTERIOR DIMENSIONS ARE FROM FACE OF FINISH TO FACE OF FINISH, UNO.
4. FOR DETAILED ELEVATIONS & SECTIONS OF KITCHEN CABINETS, BATHROOM CABINET, & DRESSING ROOM CLOSET SYSTEM, REFER TO SHEET A.702, A.703.
5. PLUMBING CHASE SHALL HAVE A FIRESTOP AT EACH FLOOR
6. MAINTAIN, BY CODE, MINIMUM REQUIRED SEPARATION BETWEEN GUESTROOMS AT PLUMBING CHASE WALLS.

GUESTROOM CEILING NOTES

1. TYPICAL CEILING FINISH HEIGHT SHALL BE 8'-0" CLEAR AFF(FLOORS 1 THROUGH 3) , UNO. 9'-0" FOURTH FLOOR HEIGHT.
2. TYPICAL CEILING FINISH HEIGHT FOR BATHROOMS AND DRESSING ROOMS SHALL BE 7'-6" CLEAR AFF, UNO.
3. TYPICAL CEILING FINISH FOR BEDROOMS, LIVING ROOMS, AND DRESSING ROOMS SHALL BE TEXTURED PAINTED GYP BD, UNO.
4. TYPICAL CEILING FINISH FOR BATHROOMS AND KITCHENS SHALL BE SMOOTH PAINTED GYP BD, UNO.
5. SOFFITS SHALL BE SMOOTH PAINTED FINISH ON GYP BD.
6. CENTER SINGLE SURFACE MOUNTED LIGHT FIXTURES IN CEILING, UNO.
7. CENTER SPRINKLER HEADS IN SPACES.

AREA	WALLS	TRIMS	DOORS	FLOORS	COMMENT	BASE	CEILING	OTHER
GUESTROOM	VYL-005	PT-005	PT-005	CPT-005	USE CPAD-005	CPTB-005		
KITCHEN	VYL-005			WDF-005		RCB-005		
BATHROOM	VYL-006	PT-005	PT-005	CT-005		CTB-005		

GENERAL FINISH NOTE: REFER TO RCP FOR CEILING FINISH. REFER TO FF&E PLAN FOR FLOOR FINISH. REFER TO INTERIOR ELEVATIONS FOR WALL FINISH.

LIGHT & POWER SYMBOLS LEGEND

	CEILING MOUNTED LIGHT FIXTURE
	PENDANT LIGHT FIXTURE
	FLOOR LAMP
	DESK/TABLE LAMP
SD	SMOKE DETECTOR
DB	DOOR BELL w/ LIGHT (HEARING IMPAIRED ROOMS)
TV	CABLE TV CONNECTION
	TELEPHONE CONNECTION
	COMPUTER/DATA OUTLET
T	THERMOSTAT
	EXHAUST FAN
	DUPLEX RECEPTACLE
	QUADPLEX RECEPTACLE
	G.F.I. RECEPTACLE
	SPECIAL RECEPTACLE
	PTAC RECEPTACLE
	DUPLEX RECEPTACLE & TELEPHONE OUTLET W/ COMMON PLATE
	DUPLEX RECEPTACLE, TEL/COMP DATA OUTLET WITH COMMON PLATE
$	GFI RECEPTACLE/SINGLE POLE SWITCH WITH COMMON PLATE
$	SINGLE POLE SWITCH
$2	DOUBLE POLE SWITCH
$3	THREE WAY SWITCH
$4	FOUR WAY SWITCH
$OC	WALL MOUNTED OCCUPANCY SENSOR W/ SWITCH

TOILET & BATH ACCESSORY SCHEDULE

ITEM#	DESCRIPTION	LOC.
TA-05	TOILET	PRR, GR ADA GR.
TA-06	CONTINUOUS TOILET GRAB BAR (SURFACE MOUNTED)	GR & ADA GR.
TA-07	SINK / CASEWORK (MOUNTING HEIGHT)	GR & ADA GR.
TA-08	MIRROR, SURFACE MOUNTED (BOTTOM @ 40" AFF)	GR & ADA GR.
TA-09	TOWEL BAR (24"L @ 54" AFF 24" @ 42") SURFACE MOUNTED	GR & ADA GR.
TA-10	TOWEL BAR (16"L @ 54" AFF) SURFACE MOUNTED	GR & ADA GR.
TA-11	TOILET TISSUE DISPENSER (SINGLE ROLL / RECESSED)	PRR, GR & ADA GR.
TA-12	TUB GRAB BAR, SURFACE MOUNTED (NON-HANDICAPPED)	GR
TA-13	CURVED SHOWER CURTAIN ROD, SURFACE MOUNTED, (MOUNTING HEIGHT = SEE SCHEDULE)	GR & ADA GR.
TA-14	FOLDING SHOWER SEAT, SURFACE MOUNTED	ADA GR.
TA-15	12" TUB GRAB BAR (HEAD END, SURFACE MTD)	ADA GR.
TA-16	24" TUB GRAB BAR, 2 REQD (SIDE WALL, SURFACE MTD.)	ADA GR.
TA-17	24" TUB GRAB BAR (DRAIN END, SURFACE MTD)	ADA GR.
TA-18	SHOWER GRAB BARS SURFACE MOUNTED	ADA GR.
TA-19	ROBE/COAT HOOK	GR
TA-20	ROBE/COAT HOOK 48"	ADA GR.
TA-21	HAIR DRYER	GR & ADA GR.
TA-22	SHWR HEAD & CONTROLS (MOUNTING HEIGHT = SEE SCHED)	GR
TA-23	SHWR HEAD & CONTROLS (MOUNTING HEIGHT = SEE SCHED)	ADA GR.
TA-24	CULTURED SHELF 24"	GR
TA-25	SOAP DISH 42"	GR & ACC GR.

TOILET/BATH ACCESSORY NOTES:

1. PRR = PUBLIC RESTROOM
   GR. = GUESTROOM
   ADA GR = ACCESSIBLE GUESTROOM

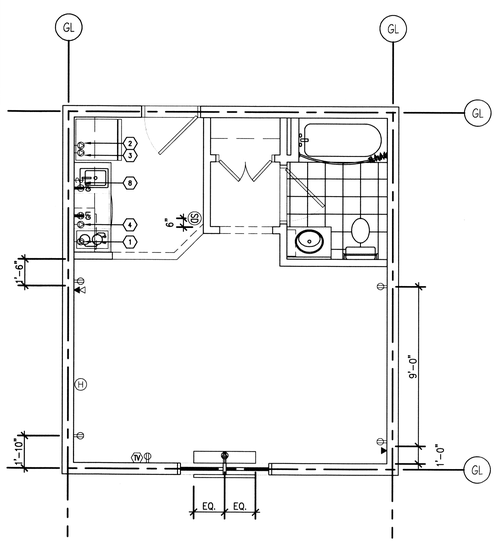

4 ELECTRIC DEVICE PLAN
SCALE: 1/4"=1'-0"

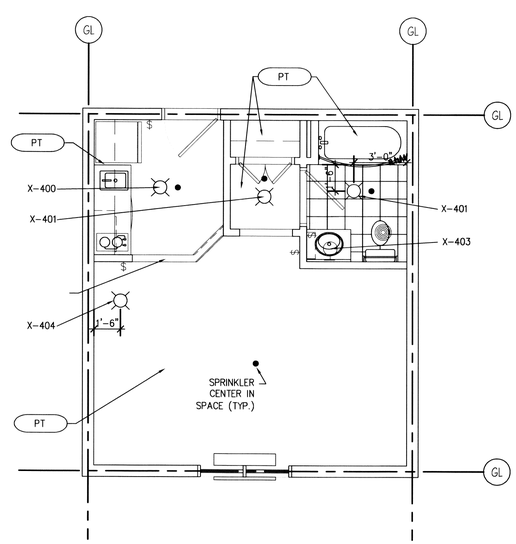

3 REFLECTED CEILING PLAN
SCALE: 1/4"=1'-0"

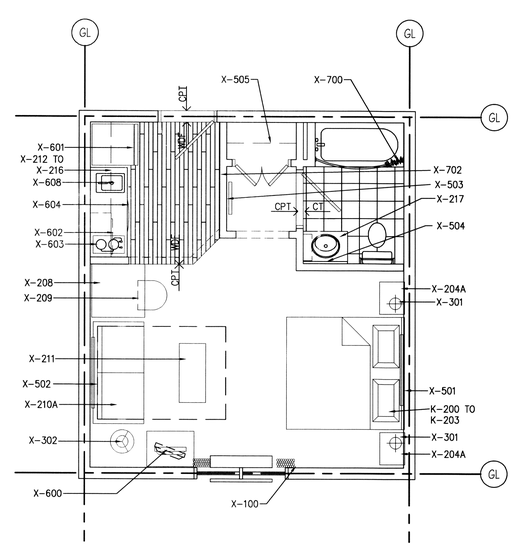

2 FLOOR FINISH/FFE PLAN
SCALE: 1/4"=1'-0"

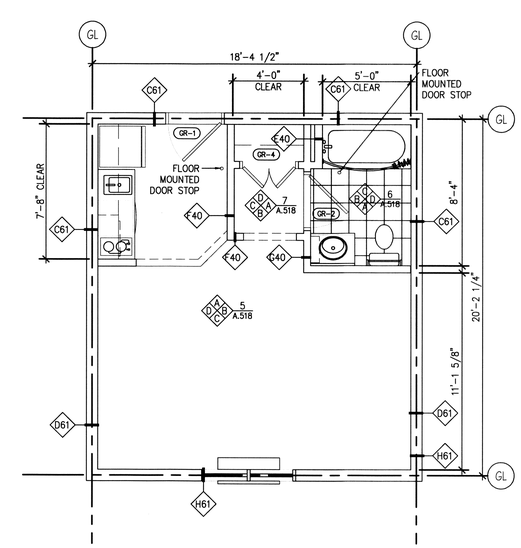

1 ARCHITECTURAL FLOOR PLAN
SCALE: 1/4"=1'-0"

DAMMON ENGINEERING, INC.
LOUISIANA & MISSISSIPPI
www.dammonengineering.com
info@dammonengineering.com
PH: 985.641.3032 F: 985.641.5950
Chief Engineer: Brian Mistich, PE
554 Old Spanish Trail
Slidell, LA 70458

REVISIONS

#	DESCRIPTION	DATE

SEAL: JARED M. SIMONEAUX REG. NO. 7731 STATE OF LOUISIANA REGISTERED ARCHITECT

MAINSTAY SUITES
700 MAN STREET
LOT #1 LA HWY 27
HACKBERRY, LA 70645

THIS PLAN, SPECIFICATION, OR OTHER DOCUMENT, DRAWING OR DESIGN IS THE PROPERTY AND INTELLECTUAL PROPERTY OF DAMMON ENGINEERING, INC. (HEREINAFTER "DAMMON") AND IS NOT TO BE REPRODUCED, CHANGED OR COPIED IN ANY FORM OR MANNER WHATSOEVER, NOR ARE THEY TO BE ASSIGNED TO ANY THIRD PARTY WITHOUT FIRST OBTAINING THE EXPRESS WRITTEN PERMISSION AND CONSENT OF DAMMON. ANY USE ESTABLISHES A PRESUMPTION OF UNAUTHORIZED USE. THE PARTY ACCEPTING THIS PLAN, SPECIFICATION, OR OTHER DOCUMENT, DRAWING OR DESIGN AGREES TO RETURN IT UPON THE REQUEST OF DAMMON.

JOB No:	2265
DATE:	FEBRUARY, 2016
DRAWN BY:	JTL
CHECKED BY:	JMS

SHEET TITLE:
KING SUITE DETAILS

DRAWING NUMBER:
A311

SHEET No: 35 of 52

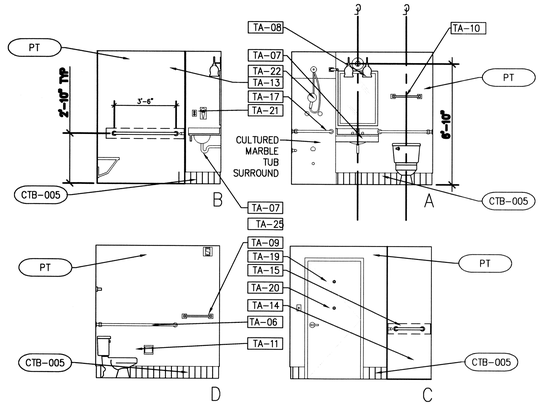

6 INTERIOR ELEVATIONS
SCALE: 1/4"=1'-0"

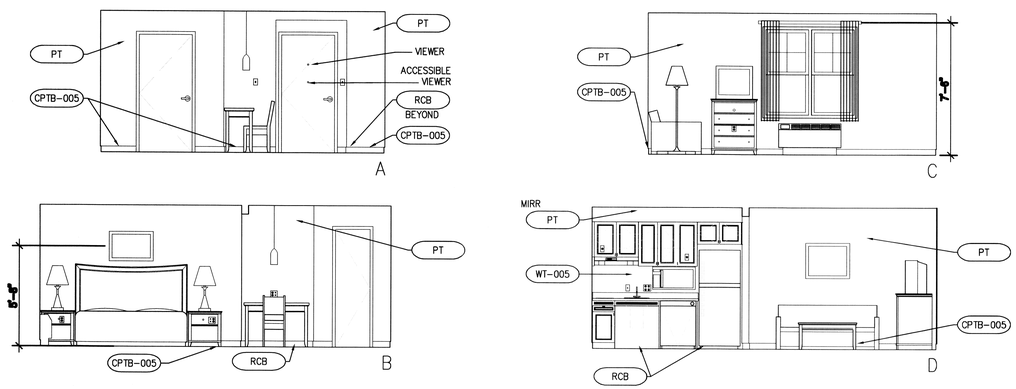

5 INTERIOR ELEVATIONS
SCALE: 1/4"=1'-0"

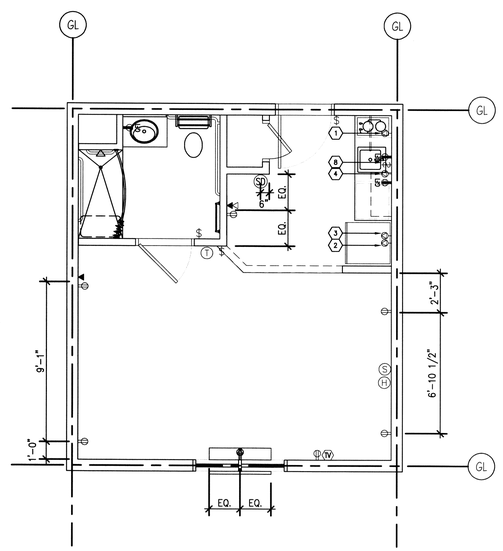

4 ELECTRICAL DEVICE PLAN
SCALE: 1/4"=1'-0"

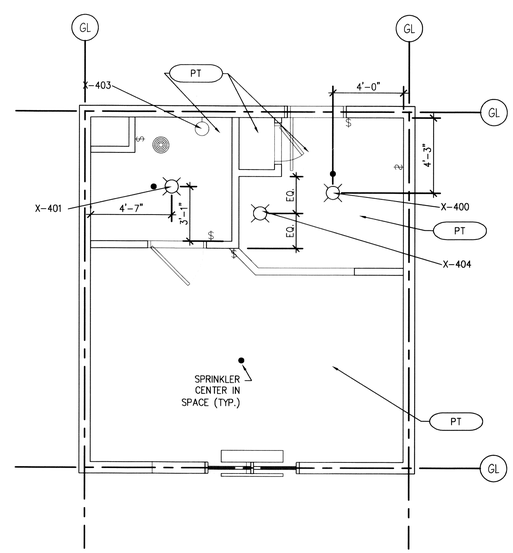

3 REFLECTED CEILING PLAN
SCALE: 1/4"=1'-0"

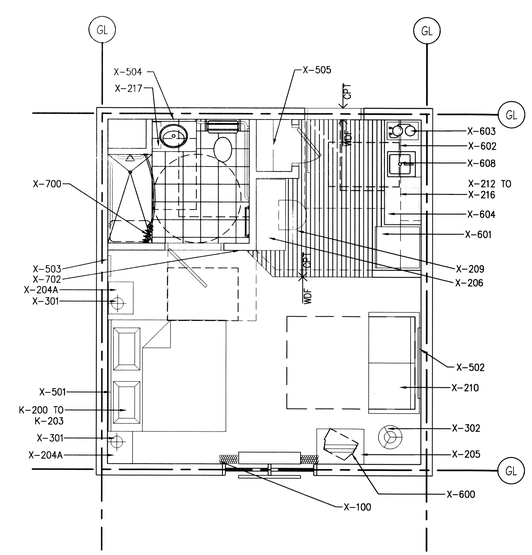

2 FLOOR FINISH/FFE PLAN
SCALE: 1/4"=1'-0"

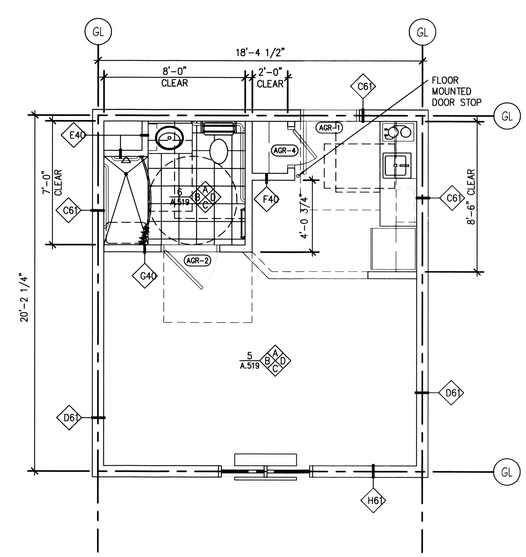

1 ARCHITECTURAL FLOOR PLAN
SCALE: 1/4"=1'-0"

GUESTROOM GENERAL NOTES

1. REFER TO 1/8" FLOOR PLANS FOR OVERALL GUESTROOM AND WINDOW DIMENSIONS, UNO.
2. GRID LINES ARE LOCATED AT THE CENTERLINE OF STUDS.
3. OVERALL ROOM DIMENSIONS ARE FROM CENTERLINE OF STUD TO CENTERLINE OF STUD. INTERIOR DIMENSIONS ARE FROM FACE OF FINISH TO FACE OF FINISH, UNO.
4. FOR DETAILED ELEVATIONS & SECTIONS OF KITCHEN CABINETS, BATHROOM CABINET, & DRESSING ROOM CLOSET SYSTEM, REFER TO SHEET A.702, A.703.
5. PLUMBING CHASE SHALL HAVE A FIRESTOP AT EACH FLOOR
6. MAINTAIN, BY CODE, MINIMUM REQUIRED SEPARATION BETWEEN GUESTROOMS AT PLUMBING CHASE WALLS.

GUESTROOM CEILING NOTES

1. TYPICAL CEILING FINISH HEIGHT SHALL BE 8'-0" CLEAR AFF(FLOORS 1 THROUGH 3) , UNO. 9'-0" FOURTH FLOOR HEIGHT.
2. TYPICAL CEILING FINISH HEIGHT FOR BATHROOMS AND DRESSING ROOMS SHALL BE 7'-6" CLEAR AFF, UNO.
3. TYPICAL CEILING FINISH FOR BEDROOMS, LIVING ROOMS, AND DRESSING ROOMS SHALL BE TEXTURED PAINTED GYP BD, UNO.
4. TYPICAL CEILING FINISH FOR BATHROOMS AND KITCHENS SHALL BE SMOOTH PAINTED GYP BD, UNO.
5. SOFFITS SHALL BE SMOOTH PAINTED FINISH ON GYP BD.
6. CENTER SINGLE SURFACE MOUNTED LIGHT FIXTURES IN CEILING, UNO.
7. CENTER SPRINKLER HEADS IN SPACES.

AREA	WALLS	TRIMS	DOORS	FLOORS	COMMENT	BASE	CEILING	OTHER
GUESTROOM	VYL-005	PT-005	PT-005	CPT-005	USE CPAD-005	CPTB-005		
KITCHEN	VYL-005			WDF-005		RCB-005		
BATHROOM	VYL-006	PT-005	PT-005	CT-005		CTB-005		

GENERAL FINISH NOTE: REFER TO RCP FOR CEILING FINISH. REFER TO FF&E PLAN FOR FLOOR FINISH. REFER TO INTERIOR ELEVATIONS FOR WALL FINISH.

LIGHT & POWER SYMBOLS LEGEND

	CEILING MOUNTED LIGHT FIXTURE
	PENDANT LIGHT FIXTURE
	FLOOR LAMP
	DESK/TABLE LAMP
SD	SMOKE DETECTOR
DB	DOOR BELL w/ LIGHT (HEARING IMPAIRED ROOMS)
TV	CABLE TV CONNECTION
	TELEPHONE CONNECTION
	COMPUTER/DATA OUTLET
T	THERMOSTAT
	EXHAUST FAN
	DUPLEX RECEPTACLE
	QUADPLEX RECEPTACLE
	G.F.I. RECEPTACLE
	SPECIAL RECEPTACLE
	PTAC RECEPTACLE
	DUPLEX RECEPTACLE & TELEPHONE OUTLET W/ COMMON PLATE
	DUPLEX RECEPTACLE, TEL/COMP DATA OUTLET WITH COMMON PLATE
$	GFI RECEPTACLE/SINGLE POLE SWITCH WITH COMMON PLATE
$	SINGLE POLE SWITCH
$2	DOUBLE POLE SWITCH
$3	THREE WAY SWITCH
$4	FOUR WAY SWITCH
$OC	WALL MOUNTED OCCUPANCY SENSOR W/ SWITCH

TOILET & BATH ACCESSORY SCHEDULE

ITEM#	DESCRIPTION	LOC.
TA-05	TOILET	PRR, GR ADA GR
TA-06	CONTINUOUS TOILET GRAB BAR (SURFACE MOUNTED)	GR & ADA GR
TA-07	SINK / CASEWORK (MOUNTING HEIGHT)	GR & ADA GR
TA-08	MIRROR, SURFACE MOUNTED (BOTTOM @ 40" AFF)	GR & ADA GR
TA-09	TOWEL BAR (24"L @ 54" AFF 24" @ 42") SURFACE MOUNTED	GR & ADA GR
TA-10	TOWEL BAR (16"L @ 54" AFF) SURFACE MOUNTED	GR & ADA GR
TA-11	TOILET TISSUE DISPENSER (SINGLE ROLL / RECESSED)	PRR, GR & ADA GR
TA-12	TUB GRAB BAR, SURFACE MOUNTED (NON-HANDICAPPED)	GR
TA-13	CURVED SHOWER CURTAIN ROD, SURFACE MOUNTED, (MOUNTING HEIGHT = SEE SCHEDULE)	GR & ADA GR
TA-14	FOLDING SHOWER SEAT, SURFACE MOUNTED	ADA GR
TA-15	12" TUB GRAB BAR (HEAD END, SURFACE MTD)	ADA GR
TA-16	24" TUB GRAB BAR, 2 REQ'D (SIDE WALL, SURFACE MTD.)	ADA GR
TA-17	24" TUB GRAB BAR (DRAIN END, SURFACE MTD)	ADA GR
TA-18	SHOWER GRAB BARS SURFACE MOUNTED	ADA GR
TA-19	ROBE/COAT HOOK	GR
TA-20	ROBE/COAT HOOK 48"	ADA GR
TA-21	HAIR DRYER	GR & ADA GR
TA-22	SHWR HEAD & CONTROLS (MOUNTING HEIGHT = SEE SCHED)	GR
TA-23	SHWR HEAD & CONTROLS (MOUNTING HEIGHT = SEE SCHED)	ADA GR
TA-24	CULTURED SHELF 24"	GR
TA-25	SOAP DISH 42"	GR & ACC GR

TOILET/BATH ACCESSORY NOTES:

1. PRR = PUBLIC RESTROOM
   GR = GUESTROOM
   ADA GR = ACCESSIBLE GUESTROOM

DAMMON ENGINEERING, INC.
LOUISIANA & MISSISSIPPI
www.dammonengineering.com
www.dammonengineers.com
PH: 985.649.5832 F: 985.641.5950
Chief Engineer: Brian Mistich, PE
5544 Owen Trail
Slidell, LA 70458

#	DESCRIPTION	DATE
	REVISIONS	

SEAL:

JARED M. SIMONEAUX REG. NO. 7791 STATE OF LOUISIANA REGISTERED ARCHITECT

The information contained on this drawing is the property of Dammon Engineering, Inc. It is to be used only for the project specified in the agreement between Dammon Engineering, Inc. and its client. It is not to be used for any other purpose or project without written permission of Dammon Engineering, Inc.

MAINSTAY SUITES
700 MAIN STREET
LOT #1 LA HWY 21
HACKBERRY, LA 70645

JOB No: 2265 | DATE: FEBRUARY, 2016
DRAWN BY: JTL | CHECKED BY: JMS

SHEET TITLE:
ACCESSIBLE KING SUITE DETAILS

DRAWING NUMBER:
A312

SHEET No: 36 of 52

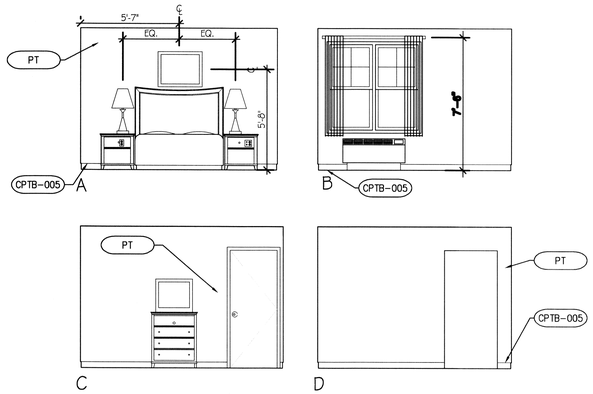

6 INTERIOR ELEVATIONS
SCALE: 1/4"=1'-0"

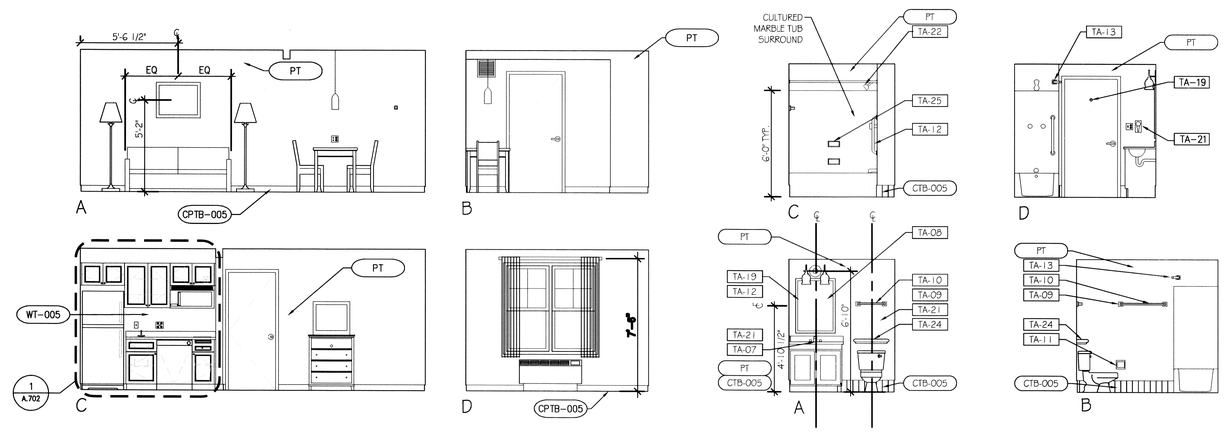

5 INTERIOR ELEVATIONS
SCALE: 1/4"=1'-0"

7 INTERIOR ELEVATIONS
SCALE: 1/4"=1'-0"

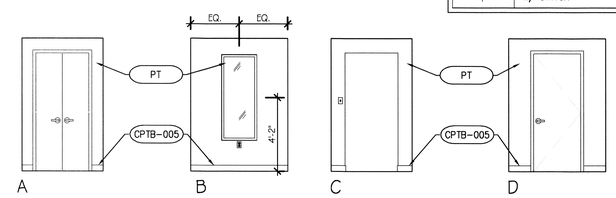

8 INTERIOR ELEVATIONS
SCALE: 1/4"=1'-0"

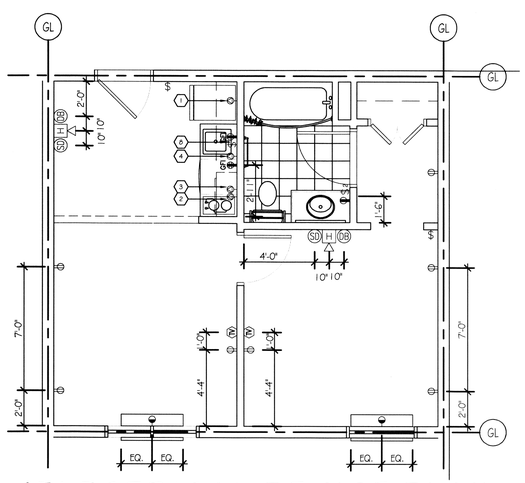

4 ELECTRICAL DEVICE PLAN
SCALE: 1/4"=1'-0"

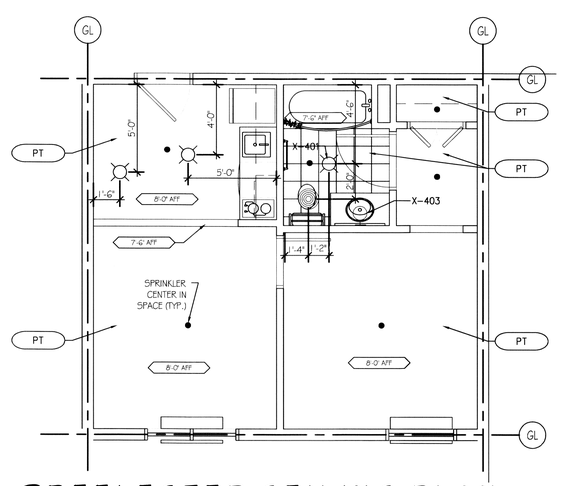

3 REFLECTED CEILING PLAN
SCALE: 1/4"=1'-0"

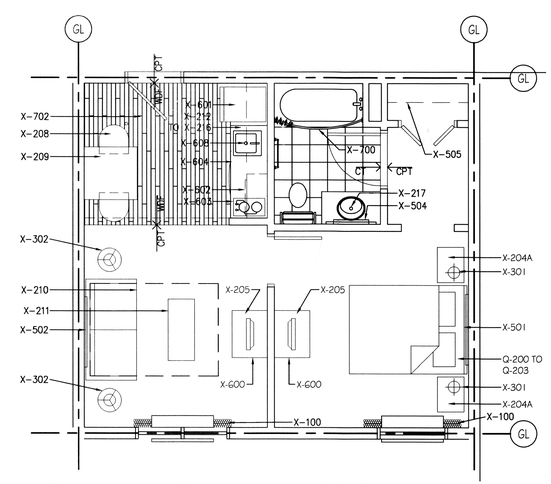

2 FLOOR FINISH/FFE PLAN
SCALE: 1/4"=1'-0"

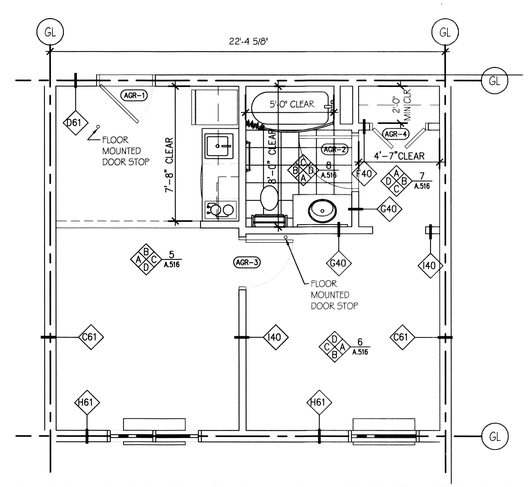

1 ARCHITECTURAL FLOOR PLAN
SCALE: 1/4"=1'-0"

GUESTROOM GENERAL NOTES

1. REFER TO 1/8" FLOOR PLANS FOR OVERALL GUESTROOM AND WINDOW DIMENSIONS, UNO.
2. GRID LINES ARE LOCATED AT THE CENTERLINE OF STUDS.
3. OVERALL ROOM DIMENSIONS ARE FROM CENTERLINE OF STUD TO CENTERLINE OF STUD. INTERIOR DIMENSIONS ARE FROM FACE OF FINISH TO FACE OF FINISH, UNO.
4. FOR DETAILED ELEVATIONS & SECTIONS OF KITCHEN CABINETS, BATHROOM CABINET, & DRESSING ROOM CLOSET SYSTEM, REFER TO SHEET A.702, A.703.
5. PLUMBING CHASE SHALL HAVE A FIRESTOP AT EACH FLOOR
6. MAINTAIN, BY CODE, MINIMUM REQUIRED SEPARATION BETWEEN GUESTROOMS AT PLUMBING CHASE WALLS.

GUESTROOM CEILING NOTES

1. TYPICAL CEILING FINISH HEIGHT SHALL BE 8'-0" CLEAR AFF(FLOORS 1 THROUGH 3) , UNO. 9'-0" FOURTH FLOOR HEIGHT.
2. TYPICAL CEILING FINISH HEIGHT FOR BATHROOMS AND DRESSING ROOMS SHALL BE 7'-6" CLEAR AFF, UNO.
3. TYPICAL CEILING FINISH FOR BEDROOMS, LIVING ROOMS, AND DRESSING ROOMS SHALL BE TEXTURED PAINTED GYP BD, UNO.
4. TYPICAL CEILING FINISH FOR BATHROOMS AND KITCHENS SHALL BE SMOOTH PAINTED GYP BD, UNO.
5. SOFFITS SHALL BE SMOOTH PAINTED FINISH ON GYP BD.
6. CENTER SINGLE SURFACE MOUNTED LIGHT FIXTURES IN CEILING, UNO.
7. CENTER SPRINKLER HEADS IN SPACES.

AREA	WALLS	TRIMS	DOORS	FLOORS	COMMENT	BASE	CEILING	OTHER
GUESTROOM	VYL-005	PT-005	PT-005	CPT-005	USE CPAD-005	CPTB-005		
KITCHEN	VYL-005			WDF-005		RCB-005		
BATHROOM	VYL-006	PT-005	PT-005	CT-005		CTB-005		

GENERAL FINISH NOTE: REFER TO RCP FOR CEILING FINISH. REFER TO FF&E PLAN FOR FLOOR FINISH. REFER TO INTERIOR ELEVATIONS FOR WALL FINISH.

LIGHT & POWER SYMBOLS LEGEND

	CEILING MOUNTED LIGHT FIXTURE
	PENDANT LIGHT FIXTURE
	FLOOR LAMP
	DESK/TABLE LAMP
SD	SMOKE DETECTOR
DB	DOOR BELL w/ LIGHT (HEARING IMPAIRED ROOMS)
TV	CABLE TV CONNECTION
	TELEPHONE CONNECTION
	COMPUTER/DATA OUTLET
T	THERMOSTAT
	EXHAUST FAN
	DUPLEX RECEPTACLE
	QUADPLEX RECEPTACLE
	G.F.I. RECEPTACLE
	SPECIAL RECEPTACLE
	PTAC RECEPTACLE
	DUPLEX RECEPTACLE & TELEPHONE OUTLET W/ COMMON PLATE
	DUPLEX RECEPTACLE, TEL/COMP DATA OUTLET WITH COMMON PLATE
$	GFI RECEPTACLE/SINGLE POLE SWITCH WITH COMMON PLATE
$	SINGLE POLE SWITCH
$2	DOUBLE POLE SWITCH
$3	THREE WAY SWITCH
$4	FOUR WAY SWITCH
$OC	WALL MOUNTED OCCUPANCY SENSOR W/ SWITCH

TOILET & BATH ACCESSORY SCHEDULE

ITEM#	DESCRIPTION	LOC.
TA-05	TOILET	PRR, GR ADA GR
TA-06	CONTINUOUS TOILET GRAB BAR (SURFACE MOUNTED)	GR & ADA GR
TA-07	SINK / CASEWORK (MOUNTING HEIGHT)	GR & ADA GR
TA-08	MIRROR, SURFACE MOUNTED (BOTTOM @ 40" AFF)	GR & ADA GR
TA-09	TOWEL BAR (24"L @ 54" AFF 24" @ 42") SURFACE MOUNTED	GR & ADA GR
TA-10	TOWEL BAR (16"L @ 54" AFF) SURFACE MOUNTED	GR & ADA GR
TA-11	TOILET TISSUE DISPENSER (SINGLE ROLL / RECESSED)	PRR, GR & ADA GR
TA-12	TUB GRAB BAR, SURFACE MOUNTED (NON-HANDICAPPED)	GR
TA-13	CURVED SHOWER CURTAIN ROD, SURFACE MOUNTED, (MOUNTING HEIGHT = SEE SCHEDULE)	GR & ADA GR
TA-14	FOLDING SHOWER SEAT, SURFACE MOUNTED	ADA GR
TA-15	12" TUB GRAB BAR (HEAD END, SURFACE MTD)	ADA GR
TA-16	24" TUB GRAB BAR, 2 REQ'D (SIDE WALL, SURFACE MTD.)	ADA GR
TA-17	24" TUB GRAB BAR (DRAIN END, SURFACE MTD)	ADA GR
TA-18	SHOWER GRAB BARS SURFACE MOUNTED	ADA GR
TA-19	ROBE/COAT HOOK	GR
TA-20	ROBE/COAT HOOK 48"	ADA GR
TA-21	HAIR DRYER	GR & ADA GR
TA-22	SHWR HEAD & CONTROLS (MOUNTING HEIGHT = SEE SCHED)	GR
TA-23	SHWR HEAD & CONTROLS (MOUNTING HEIGHT = SEE SCHED)	ADA GR
TA-24	CULTURED SHELF 24"	GR
TA-25	SOAP DISH 42"	GR & ACC GR

TOILET/BATH ACCESSORY NOTES:

1. PRR = PUBLIC RESTROOM
   GR = GUESTROOM
   ADA GR = ACCESSIBLE GUESTROOM

DAMMON ENGINEERING, INC.
LOUISIANA & MISSISSIPPI
Chief Engineer: Brian Mistich, PE
554 Old Spanish Trail
Slidell, LA 70458
www.dammonengineering.com
info@dammonengineering.com
PH: 985.649.3832 F: 985.641.5950

REVISIONS

#	DESCRIPTION	DATE

SEAL:

MAINSTAY SUITES
700 MAIN STREET
LOT MAY ST
HACKBERRY, LA 70645

JOB No:	2225
DATE:	FEBRUARY, 2016
DRAWN BY:	JTL
CHECKED BY:	JVS

SHEET TITLE:
ACCESSIBLE ONE BEDROOM SUITE DETAILS

DRAWING NUMBER:
A313

SHEET No: 37 of 52

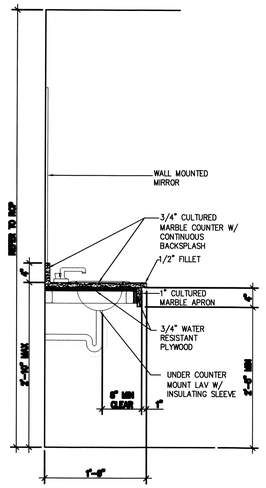

15	PUBLIC RESTROOM VANITY SECTION
N.T.S.	

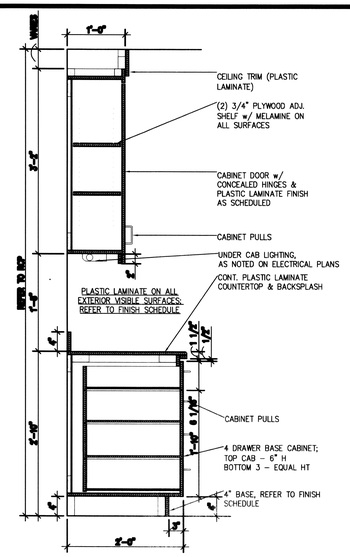

9	FOOD PREP & BREAKROOM SECTION
N.T.S.	

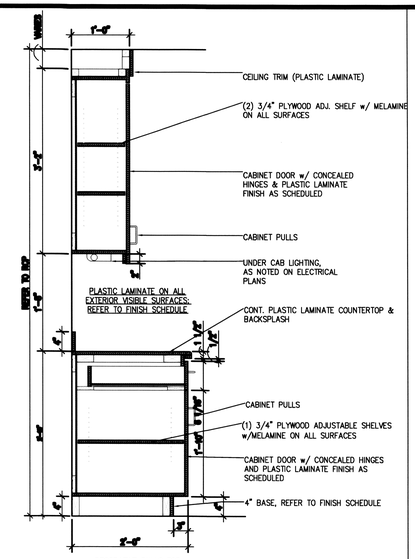

6	FOOD PREP & BREAKROOM SECTION
N.T.S.	

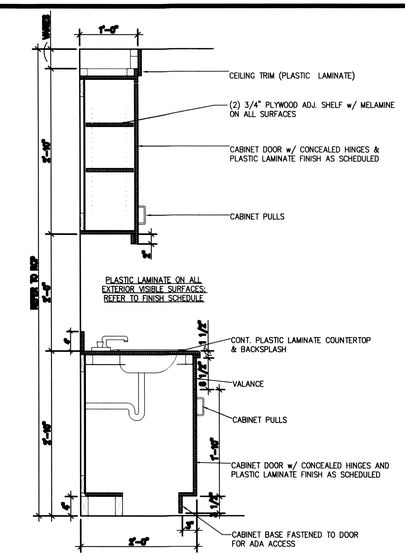

3	FOOD PREP & BREAKROOM SECTION
N.T.S.	

14	NOT USED

11	NOT USED

CONCEALED SURFACES = MELAMINE FINISH
EXPOSED SURFACES = PLASTIC LAMINATE PER SCHED

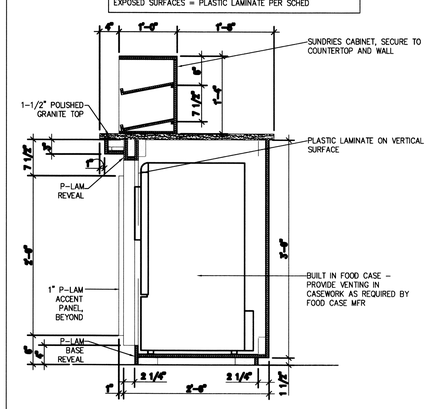

8	FOOD CASE SECTION
N.T.S.	

CONCEALED SURFACES = MELAMINE FINISH
EXPOSED SURFACES = PLASTIC LAMINATE PER SCHED

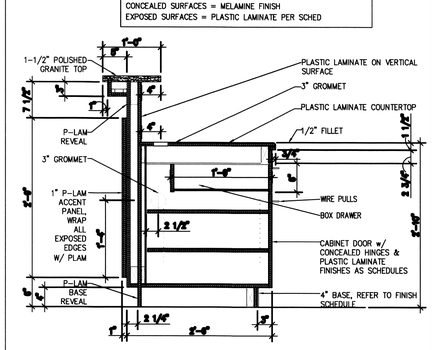

5	RECEPTION DESK SECTION
N.T.S.	

CONCEALED SURFACES = MELAMINE FINISH
EXPOSED SURFACES = PLASTIC LAMINATE PER SCHED

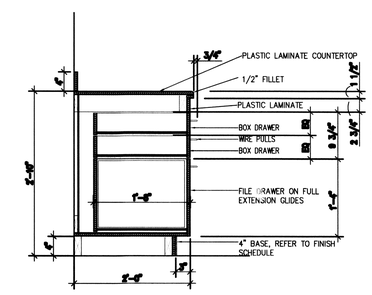

2	RECEPTION DESK SECTION
N.T.S.	

CONCEALED SURFACES = MELAMINE FINISH
EXPOSED SURFACES = PLASTIC LAMINATE PER SCHED

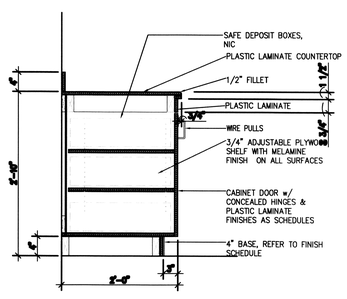

13	RECEPTION DESK SECTION
N.T.S.	

CONCEALED SURFACES = MELAMINE FINISH
EXPOSED SURFACES = PLASTIC LAMINATE PER SCHED

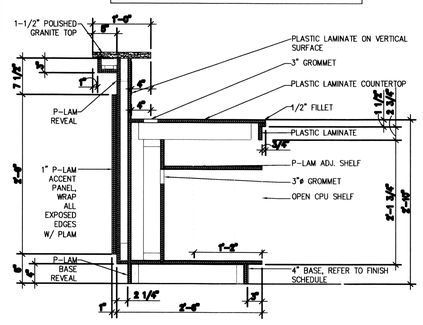

10	RECEPTION DESK SECTION
N.T.S.	

CONCEALED SURFACES = MELAMINE FINISH
EXPOSED SURFACES = PLASTIC LAMINATE PER SCHED

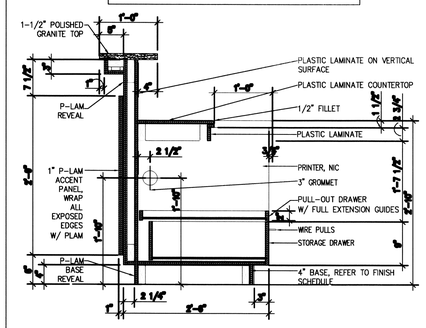

7	RECEPTION DESK SECTION
N.T.S.	

CONCEALED SURFACES = MELAMINE FINISH
EXPOSED SURFACES = PLASTIC LAMINATE PER SCHED

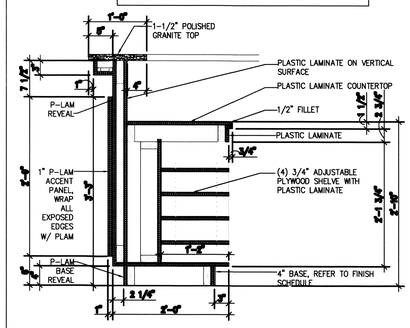

4	RECEPTION DESK SECTION
N.T.S.	

CONCEALED SURFACES = MELAMINE FINISH
EXPOSED SURFACES = PLASTIC LAMINATE PER SCHED

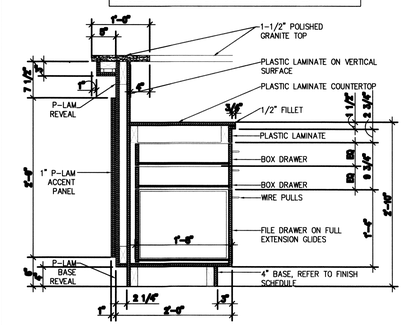

1	RECEPTION DESK SECTION
N.T.S.	

DAMMON ENGINEERING, INC
LOUISIANA & MISSISSIPPI
www.dammonengineering.com
info@dammonengineering.com
PH: 985.649.5832 F: 985.641.3950
Chief Engineer: Brian Mistich, PE
554 Old Spanish Trail
Slidell, LA 70458

#	DESCRIPTION	REVISIONS	DATE

SEAL:

JARED M. SIMONEAUX REG. NO. 7391 STATE OF LOUISIANA REGISTERED ARCHITECT

MAINSTAY SUITES

700 MAIN STREET
LOT 1 HWY 90
HACKBERRY, LA 70645

JOB No: 2265 | DATE: FEBRUARY, 2016
DRAWN BY: JTL | CHECKED BY: JMS

SHEET TITLE:
PUBLIC AREA MILLWORK DETAILS

DRAWING NUMBER:
A401

SHEET No: 38 of 52

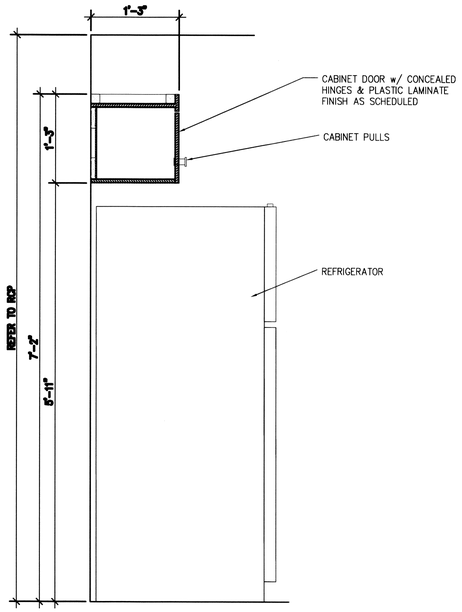

PLASTIC LAMINATE ON ALL EXTERIOR VISIBLE SURFACES (REFER TO FINISH SCHEDULE);
MELAMINE ON ALL CONCEALED SURFACES

12 GUESTROOM KITCHEN CABINET SECTION
SCALE: 1"=1'-0"

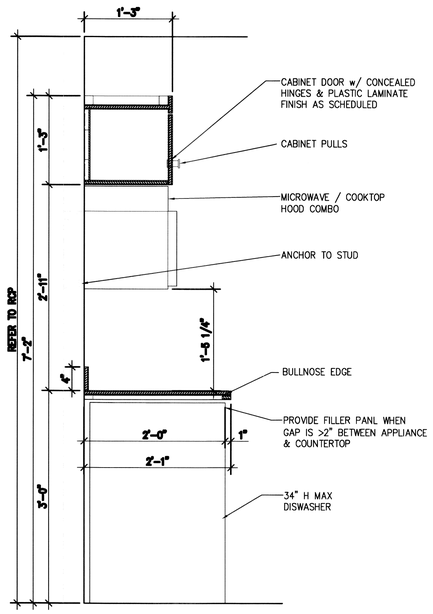

PLASTIC LAMINATE ON ALL EXTERIOR VISIBLE SURFACES (REFER TO FINISH SCHEDULE);
MELAMINE ON ALL CONCEALED SURFACES

9 GUESTROOM KITCHEN CABINET SECTION
SCALE: 1"=1'-0"

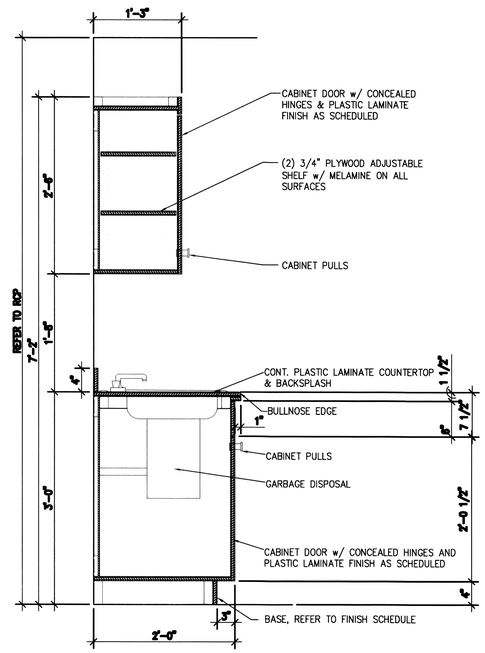

PLASTIC LAMINATE ON ALL EXTERIOR VISIBLE SURFACES (REFER TO FINISH SCHEDULE);
MELAMINE ON ALL CONCEALED SURFACES

6 GUESTROOM KITCHEN CABINET SECTION
SCALE: 1"=1'-0"

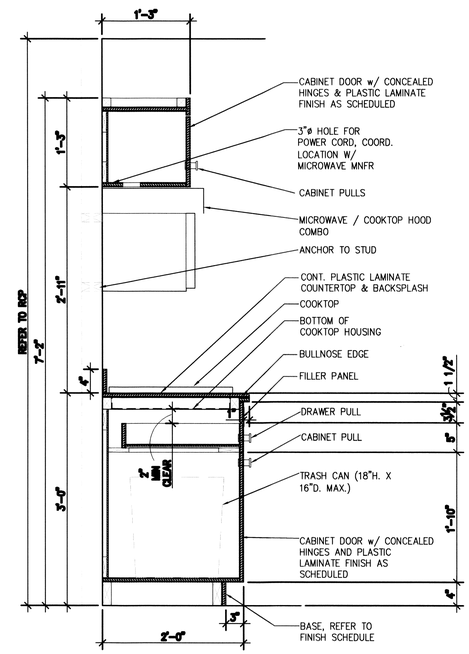

PLASTIC LAMINATE ON ALL EXTERIOR VISIBLE SURFACES (REFER TO FINISH SCHEDULE);
MELAMINE ON ALL CONCEALED SURFACES

3 GUESTROOM KITCHEN CABINET SECTION
SCALE: 1"=1'-0"

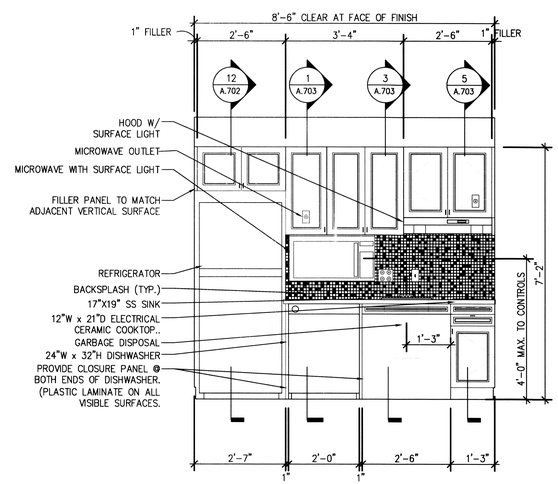

7 GUESTROOM KITCHEN ELEVATION
SCALE: 1/2"=1'-0"

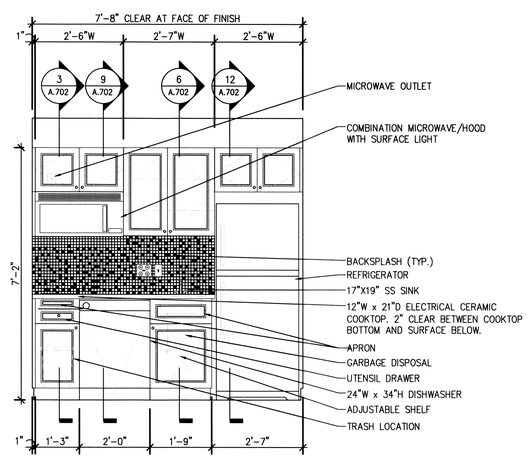

1 GUESTROOM KITCHEN ELEVATION
SCALE: 1/2"=1'-0"

DAMMON ENGINEERING, INC.
LOUISIANA & MISSISSIPPI
www.dammonengineering.com
info@dammonengineering.com
PH: 985.649.3832 F: 985.641.5950
Chief Engineer: Brian Mistich, PE
554 Old Spanish Trail
Slidell, LA 70458

#	DESCRIPTION	DATE

REVISIONS

SEAL:

JARED M. SIMONEAUX REG. NO. 7791 STATE OF LOUISIANA REGISTERED ARCHITECT

MAINSTAY SUITES
700 MAIN STREET
LOT #1, LA HWY 21
HACKBERRY, LA 70645

JOB No: 22265 DATE: FEBRUARY, 2016
DRAWN BY: JTL CHECKED BY: JMS

THE CONTENTS OF THIS DOCUMENT, INCLUDING BUT NOT LIMITED TO THE DESIGN, DATA, OR INFORMATION CONTAINED OR DISCLOSED THEREIN, OR ANY PART OF THE DOCUMENT, OR ANY COPY OR PORTION THEREOF, MAY BE THE SUBJECT OF OR COVERED BY COPYRIGHT AND OTHER PROPRIETARY RIGHTS. THE RECEIPT OF THIS DOCUMENT CONSTITUTES AGREEMENT BY THE RECEIVER THAT THE CONTENTS OF THIS DOCUMENT WILL BE HELD IN CONFIDENCE, AND THAT THE DESIGN, DATA, OR INFORMATION CONTAINED OR DISCLOSED THEREIN, OR ANY PART OF THE DOCUMENT, OR ANY COPY OR PORTION THEREOF, WILL NOT BE DISCLOSED TO OTHERS WITHOUT THE WRITTEN PERMISSION OF DAMMON ENGINEERING, INC.

SHEET TITLE:
KITCHEN ELEVATIONS & MILLWORK SECTIONS

DRAWING NUMBER:
A402

SHEET No: 39 of 52