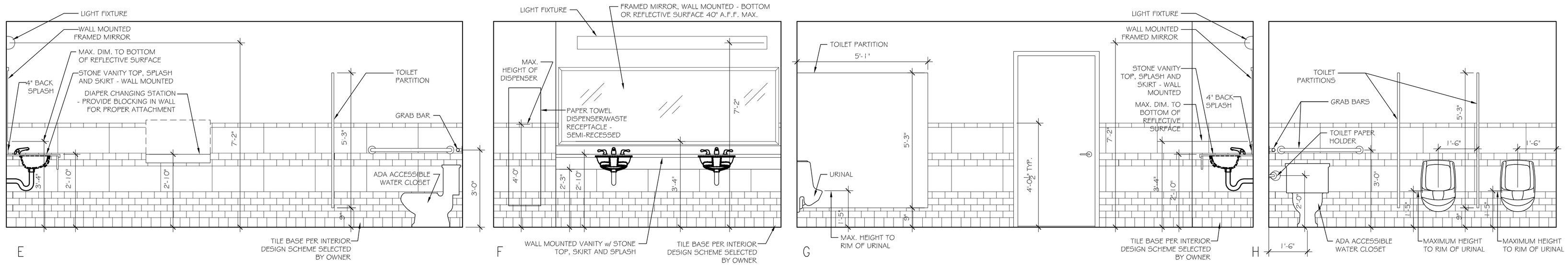

3 INTERIOR ELEVATIONS

SCALE: 1/2"=1'-0"

MENS PUBLIC RESTROOM

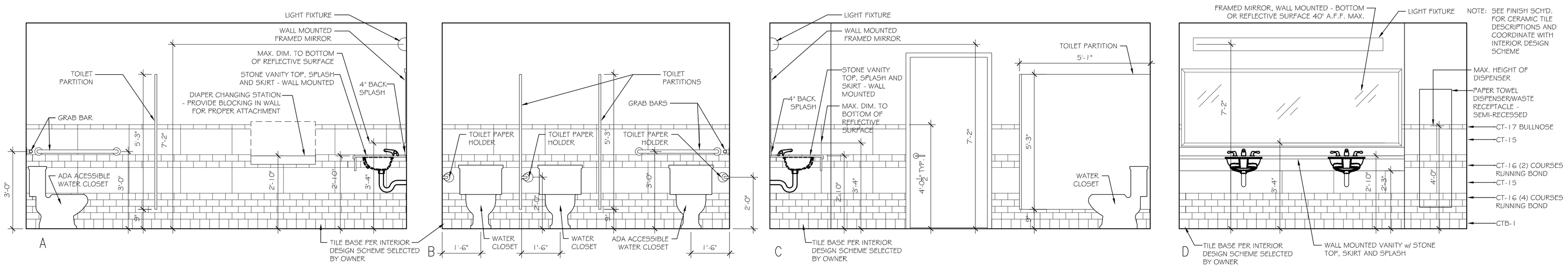

2 INTERIOR ELEVATIONS

SCALE: 1/2"=1'-0"

WOMENS PUBLIC RESTROOM

NOTE: SEE MAINSTAY SUITES PROTOTYPE DRAWINGS & SPECIFICICATIONS FOR FINISH SCHEDULES & LEGENDS FOR EQUIPMENT & MATERIAL CONTROL NO.S

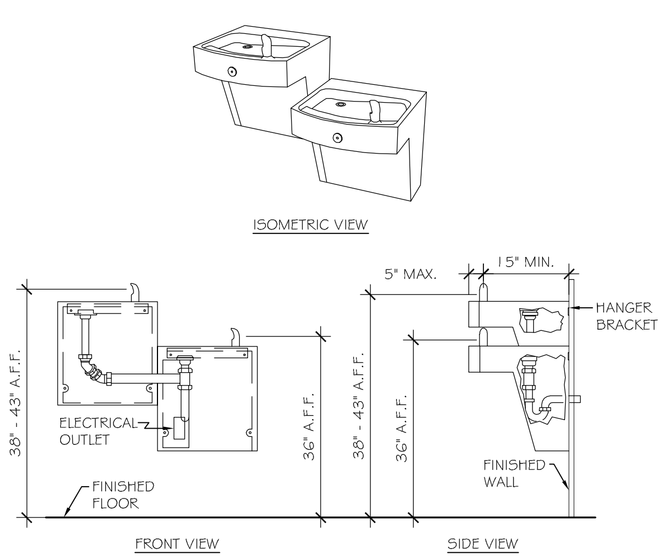

4 ELECTRIC DRINKING FOUNTAINS

SCALE: N.T.S.

IN CORRIDOR AT RESTROOMS

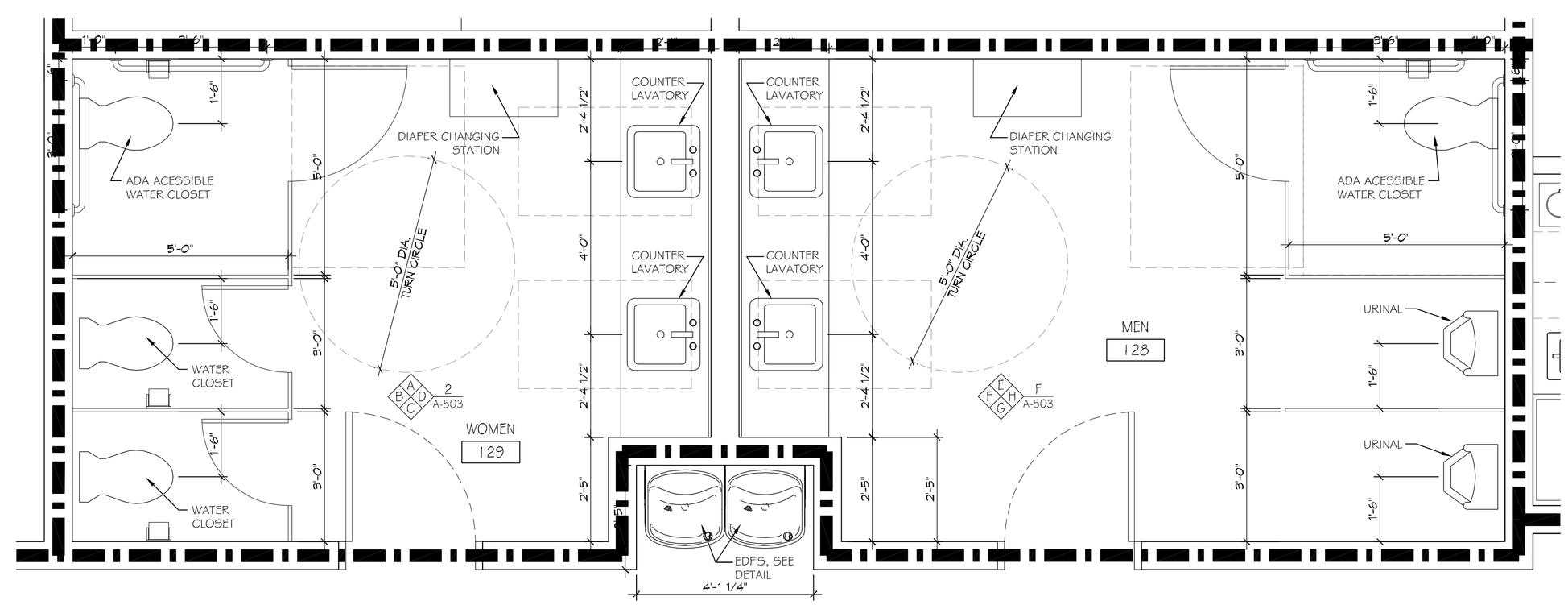

1 ENLARGED PLAN

SCALE: 1/2"=1'-0"

WOMENS & MENS PUBLIC RESTROOMS

DAMMON ENGINEERING, INC.
LOUISIANA & MISSISSIPPI
www.dammonengineering.com
info@dammonengineering.com
PH: 985.649.5832 F: 985.641.5950
Chief Engineer: Brian Mistich, PE
554 Old Spanish Trail
Slidell, LA 70458

REVISIONS

#	DESCRIPTION	DATE

SEAL:

STATE OF LOUISIANA
BRIAN A. MISTICH
License No. 30187
05-27-16
PROFESSIONAL ENGINEER

MAINSTAY SUITES

700 MAIN STREET
HWY 21
HAZLEHURST, LA 70465

JOB No:	2265
DATE:	APRIL, 2016
DRAWN BY:	JTL
CHECKED BY:	JMS

The drawings, specifications, designs and arrangements represented herein are the exclusive property of Dammon Engineering, and are given to the owner for use in connection with the construction of the project for which they are prepared. Any other use or reproduction without the written consent of Dammon Engineering, Inc. is prohibited. Dammon Engineering, Inc. cannot and does not warrant the accuracy of specifications and construction documents generated by computer software.

SHEET TITLE:
PUBLIC RESTROOMS
ENLARGED FLOOR PLAN, INTERIOR ELEVATIONS, & DETAILS

DRAWING NUMBER:

A301

SHEET No: 25 of 52