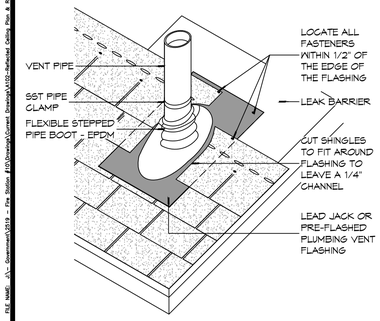

D PLUMBING VENT FLASHING

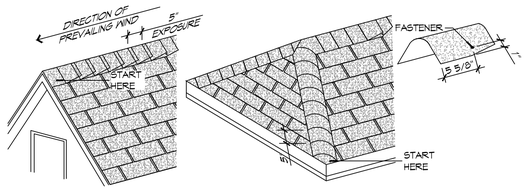

C RIDGE CAP SHINGLES

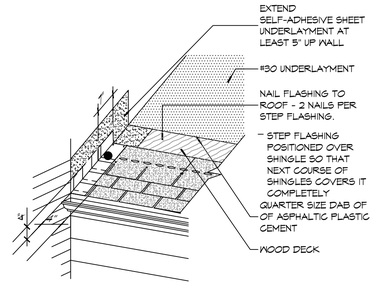

B STEP FLASHING

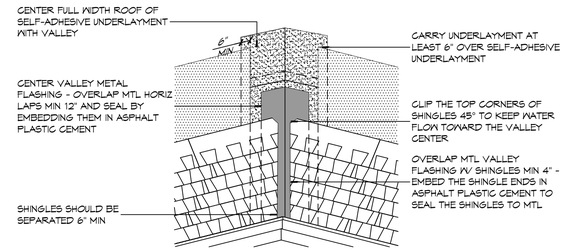

A VALLEY FLASHING

3 TYPICAL ROOF DETAILS
SCALE: 1" = 1'-0"

RCP NOTES

1. ALL CEILING HEIGHTS INDICATED ARE APPROXIMATE. ACTUAL CEILING HEIGHT TO BE DETERMINED BY STRUCTURE ELEVATION AND CEILING ASSEMBLY THICKNESS. INDICATED HEIGHT IS MEASURED ABOVE FINISH FLOOR (AFF.).
2. REFER TO SHEET A501 FOR WALL/PARTITION ASSEMBLY AND INFORMATION.
3. SEE SHEET E102 FOR LIGHT FIXTURE TYPES. SEE SHEETS M101 & M102FOR DIFFUSER AND GRILLE TYPES.
4. REFER TO INTERIOR ELEVATIONS FOR MOUNTING HEIGHT OF WALL MOUNTED LIGHT FIXTURES.
5. SEAL AROUND ALL CEILING OPENINGS ON SLEEPING QUARTERS SIDE OF SMOKE PARTITION TO RESTRICT THE MOVEMENT SMOKE.

RCP LEGEND

SYMBOL	DESCRIPTION
	2'X4' SURFACE MOUNTED FLUORESCENT LIGHT FIXTURE
	1'X4' SUSPENDED HIGH BAY LIGHT FIXTURES
	SURFACE MOUNTED FLUORESCENT LIGHT FIXTURE STRIP
	CEILING FAN
	PENDANT LIGHT FIXTURE
	RECESSED LIGHT FIXTURE
	SURFACE MOUNTED LIGHT FIXTURE
	EXHAUST FAN
	HVAC SUPPLY AIR DIFFUSER
	HVAC RETURN AIR GRILL
	GYPSUM BOARD CEILING
	METAL LINER PANEL CEILING
	METAL SOFFIT PANEL

GENERAL ROOF NOTES

1. COORDINATE INSTALLATION OF NEW ROOF SYSTEM WITH OTHER TRADES. REPORT ANY CONFLICTS WITH ITEMS BY OTHER TRADES TO THE ARCHITECT.
2. ALL PLUMBING VENTS SHALL EXTEND ABOVE THE FINISHED SURFACE OF THE ROOF SYSTEM TO PROVIDE FOR A MINIMUM OF 8" BASE FLASHING.
3. ALL EXPOSED METAL FLASHING/TRIM PIECES TO BE PRE-FINISHED 24 GA STEEL UNO. PROVIDE PRE-FINISHED OR FIELD PAINT FLASHING ONLY AS NOTED.

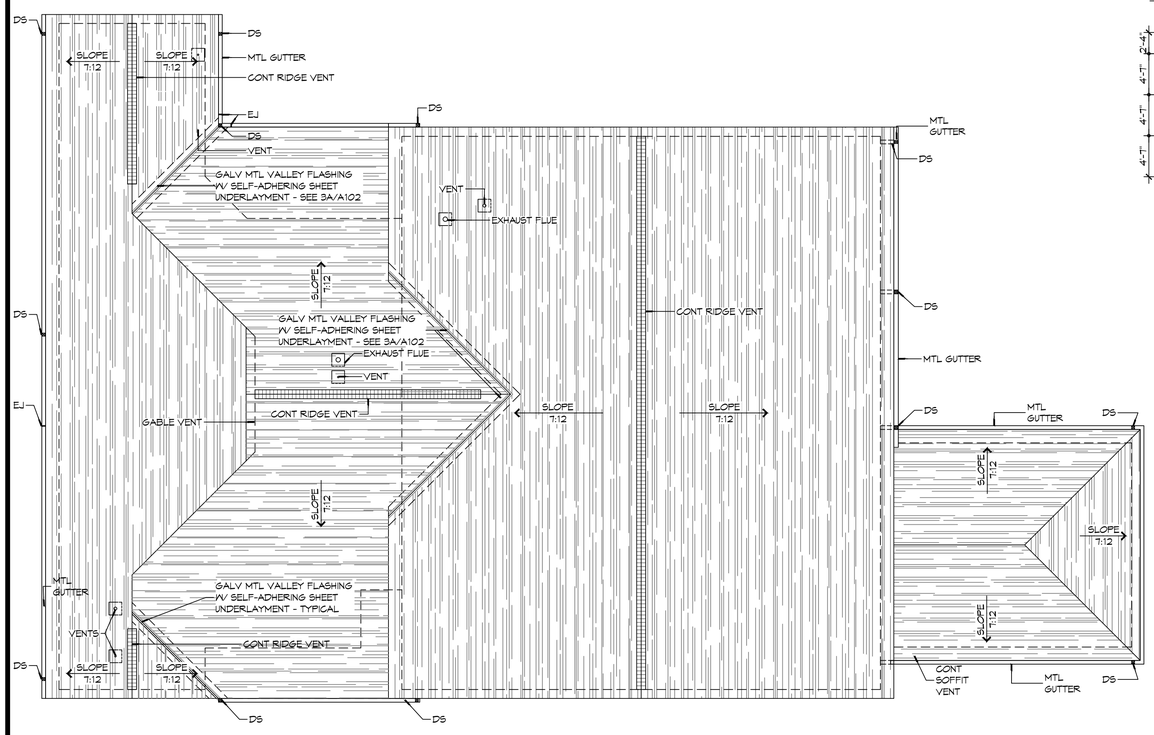

2 ROOF PLAN
SCALE: 1/8" = 1'-0"

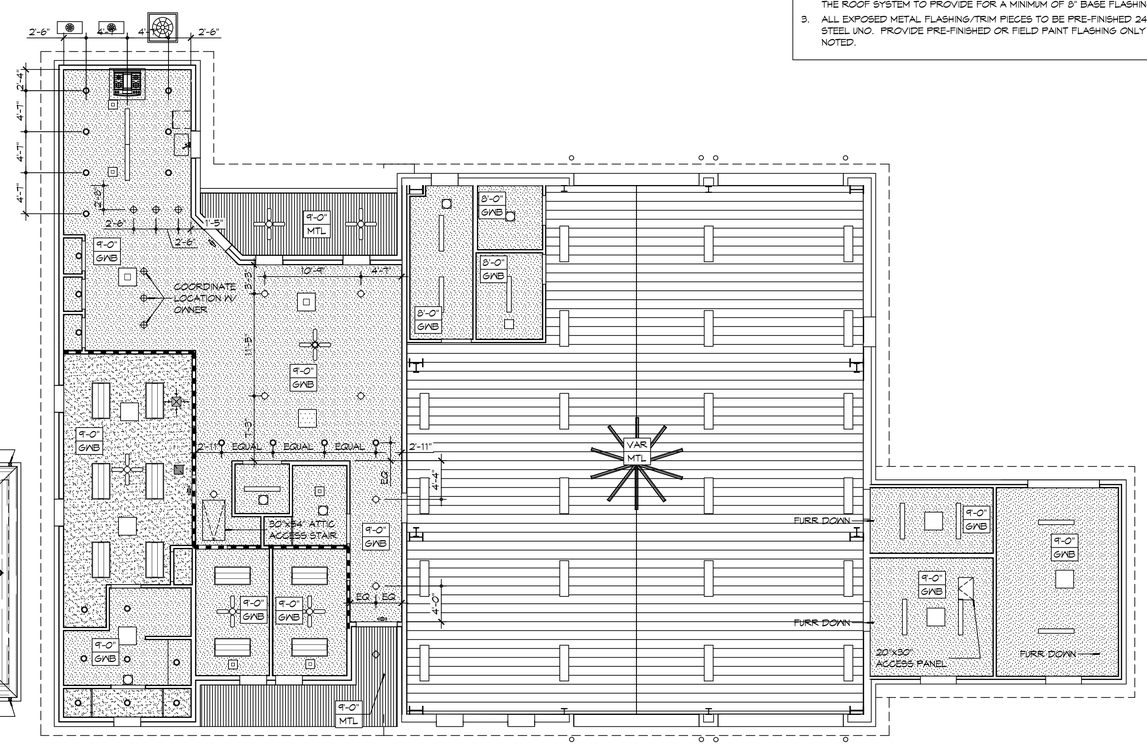

1 REFLECTED CEILING PLAN
SCALE: 1/8" = 1'-0"

DAMMON ENGINEERING, INC.
LOUISIANA & MISSISSIPPI
www.dammonengineering.com
info@dammonengineering.com
PH: 985.649.5832
Chief Engineer: Brian Mistich, PE
5540 Cypress Trace Trail
Slidell, LA 70458

#	DESCRIPTION	DATE

REVISIONS

SEAL:

NEW FIRE STATION #10
ST. TAMMANY FIRE PROTECTION DISTRICT NO. 1
2145 LAKESHORE VISTA BLVD
SLIDELL, LA 70461

JOB No:	2514
DATE:	12-03-2025
DRAWN BY:	CKD
CHECKED BY:	JMS

These drawings and specifications are the property and copyright of Dammon Engineering, and shall not be used on any other work except by agreement in writing. Reproduction of these drawings and specifications, whole or in part, is forbidden without the consent of Dammon Engineering. Visual contact with these drawings and specifications shall constitute acceptance to be bound by these conditions and understanding that no other rights are conferred.

SHEET TITLE:
REFLECTED CEILING PLAN AND ROOF PLAN, ROOF DETAILS

DRAWING NUMBER:
A102

SHEET No: 19 of 37