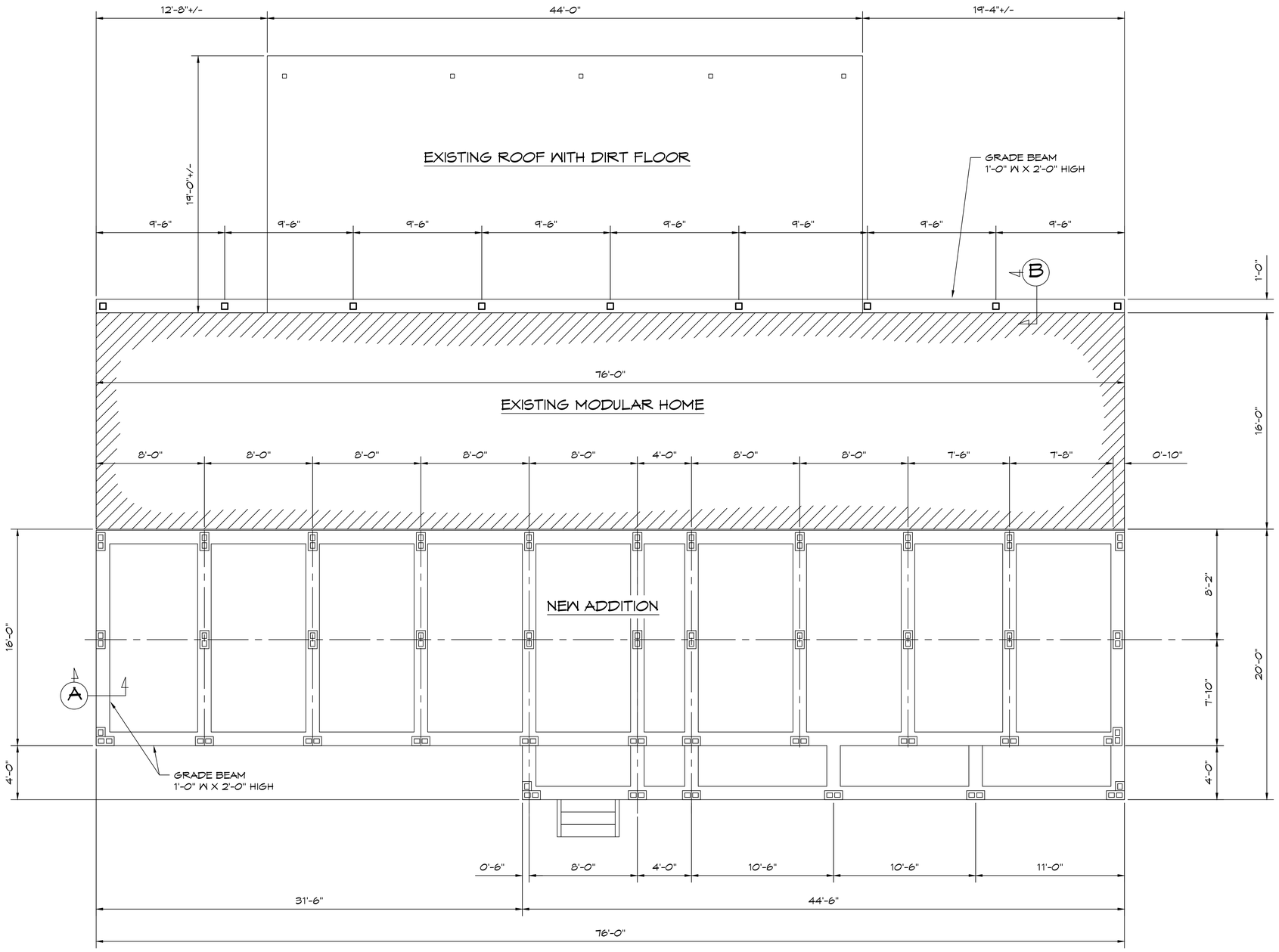

FOUNDATION PLAN

SCALE: 1/4" = 1'-0"

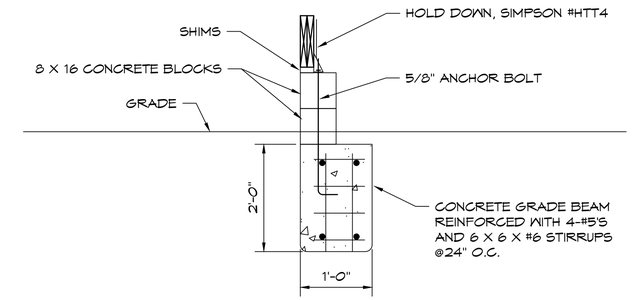

GRADE BEAM WITH HOLD DOWN

SCALE: 3/4" = 1'-0"

A

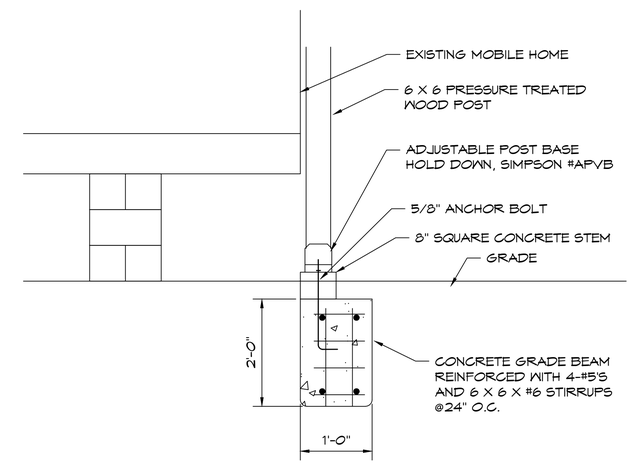

GRADE BEAM POST HOLD DOWN

SCALE: 3/4" = 1'-0"

B

STATE OF LOUISIANA
BRIAN A. MISTICH
License No. 30187
PROFESSIONAL ENGINEER

DAMMON
ENGINEERING, INC.
LOUISIANA & MISSISSIPPI

A RESIDENCE FOR:
MR. AND MRS. ORELLANA
73385 BIRDIE STREET, ABITA SPRINGS, LA. 70420

SCALE: SHOWN	APPROVED BY:	DRAWN BY:
DATE: 9/20/2025		ANTHONY E. PONCETI
FOUNDATION PLAN AND DETAILS		
		DRAWING NUMBER:

SHEET 2/9