KOHLER®
Roughing-In

K-6244-4
FLAIR™
WIDESPREAD LAVATORY FAUCET

Ordering Information

Applicable faucet:	
Lever handles	K-6244-4
ADA Lever handles are ADA compliant	

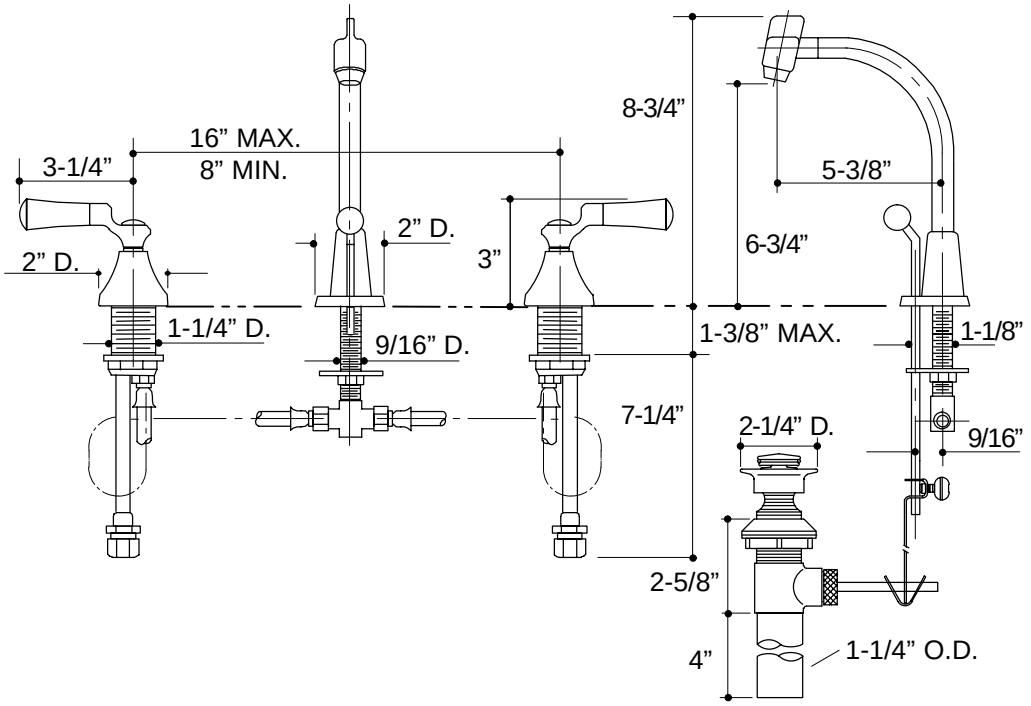

316

K-6244-4 Flair™ Lavatory Faucet
110729-1-**AA** (9619)

KOHLER®

NOTES: