KOHLER®
Roughing-In

K-14508
PROVENCE™
BAR SINK FAUCET

Ordering Information

Applicable faucet:	
Cylinder handles	K-14508-7
Oval handles	K-14508-9
Accessories/hardware:	
Escutcheon	K-14511

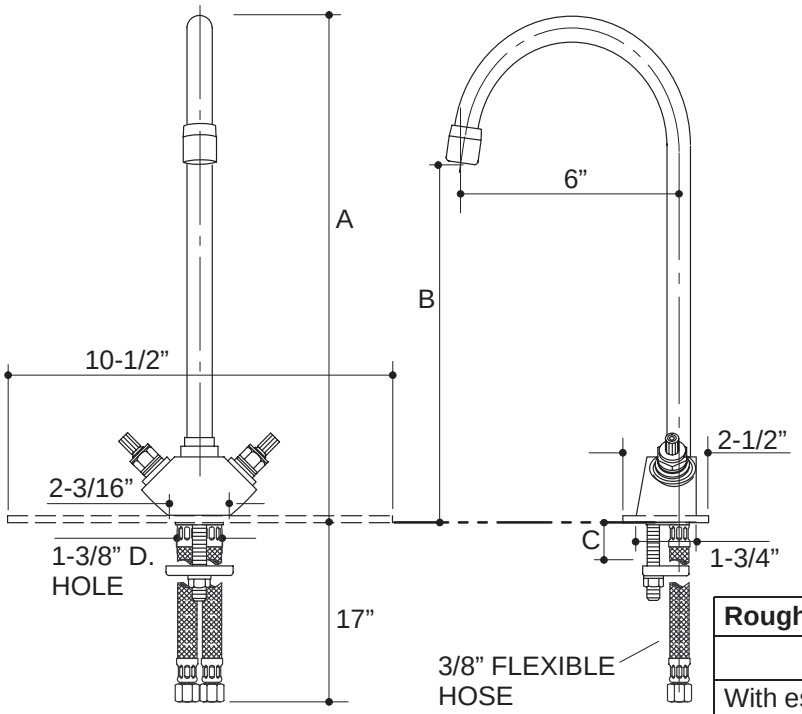

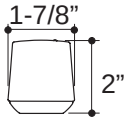

OVAL

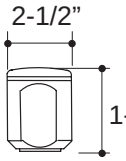

CYLINDER

Roughing-In Notes			
	A	B	C
With escutcheon	14”	10-3/16”	1-3/16” MAX.
Without escutcheon	13-13/16”	4-1/2”	1-3/8” MAX.

316

NOTES: