KOHLER®
Roughing-In

K-1045, K-1046 BODYSPA ALCOVE ACRYLIC FOOTBATH

Ordering Information

Applicable product:		
Left outlet	K-1045	shown
Right outlet	K-1046	not shown
Accessories/hardware:		
Tower	K-1040	required
Alcove enclosure	K-5161	required
Drain	K-7160-TF	recommended
Coralais Rite-Temp or Coralais Two-handle	K-1097 K-1096	recommended

Required Electrical Service

Dedicated circuit required, protected with Class A Ground-Fault Circuit-Interrupter (GFCI):	
Pump/control	120 V., 20 A, 60 Hz

Product Information

Fixture*:	basin area	top area	weight
Bathing well	1118 x 914mm	1143 x 940mm	50 Kg.
	water depth	capacity	
To overflow	210mm	163 litres**	

* Approximate measurements for comparison only.
** 37 gallon minimum required for BodySpa operation.

Pump:	HP	V	Hz	A
1-speed	1	120	60	16.5

Installation Notes

Refer to installation instructions included with fixture before beginning installation.

Allow 2121mm to 2134mm from sub-floor to finished ceiling or header for proper enclosure installation.

Top of unit must be enclosed to retain heat and contain water spray.

Pump is supplied with a grounding type plug-in cord. Locate the outlet behind the bath, and within 610mm of the pump.

Roughing-In Notes		
Fixture conforms to ANSI Standard Z124.1. All dimensions are nominal.		
No change in measurements if connected with drain illustrated.		
Minimum access panel:		
Pump/control	508mm W x 305mm H panel	required

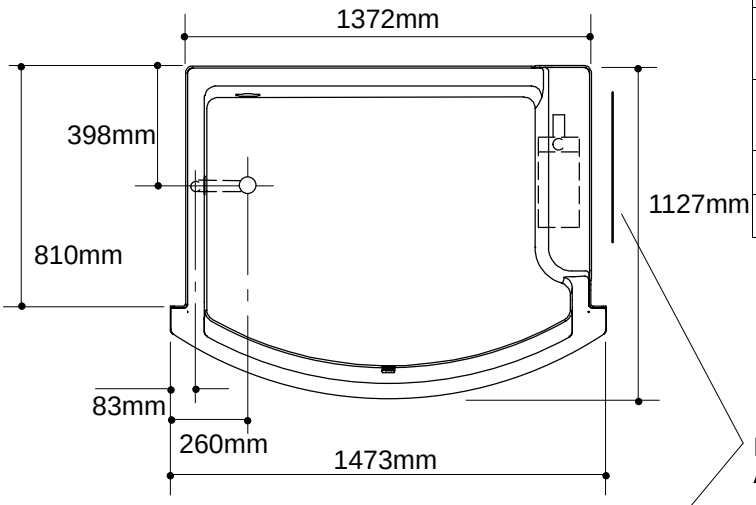

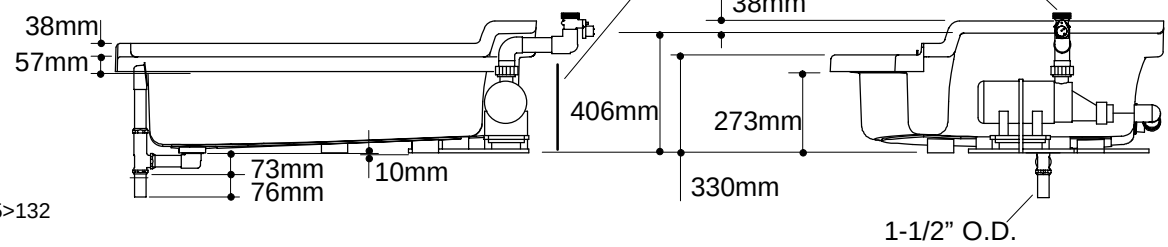

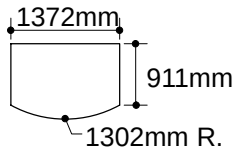

CUT-OUT DETAIL FOR DECK INSTALLATION

1.25>132