Ordering Information

Applicable product:	
Double foot control	K-13816

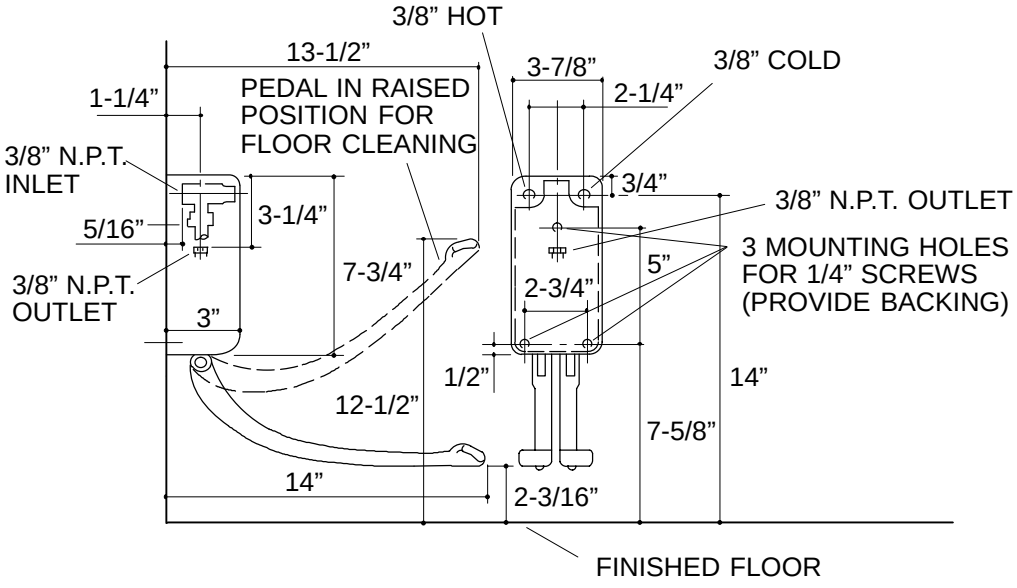

NOTES: