Ordering Information

Applicable product:	
Bedpan washer	K-13960

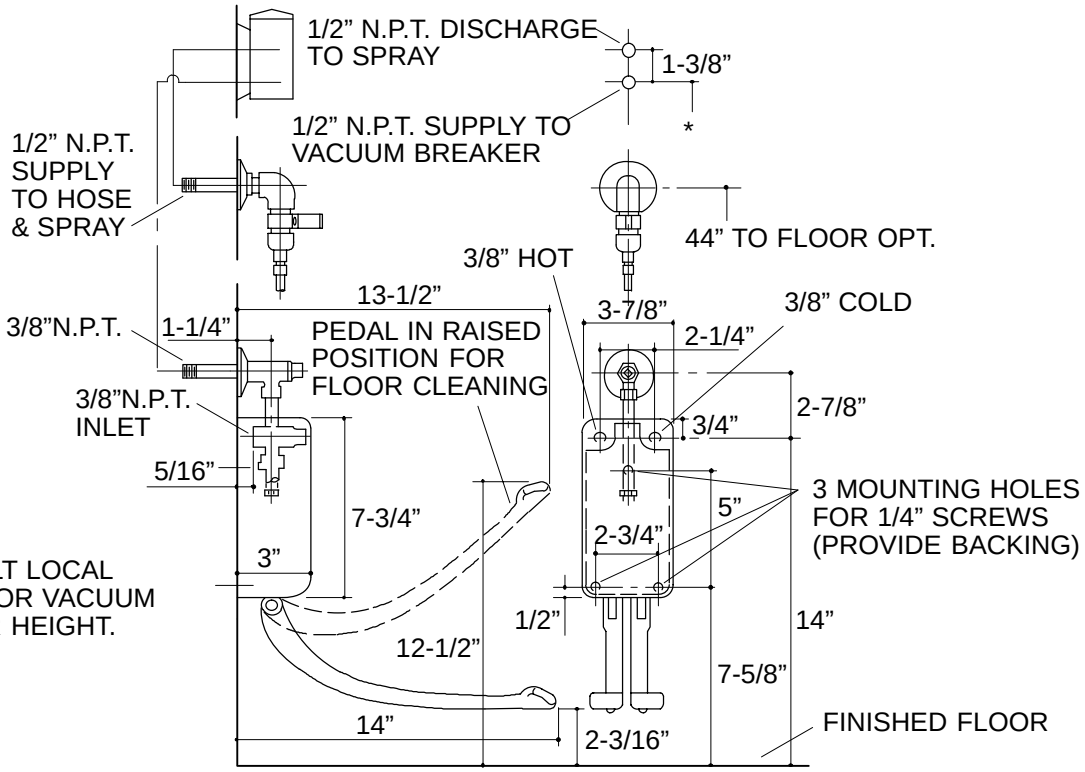

NOTES: