KOHLER®
Roughing-In

K-15174
CORALAIS™
KITCHEN SINK FAUCET

Ordering Information

Applicable product	
Faucet with 8-1/2” spout	K-15174
Kitchen faucet with ground joints	K-15174-P
Accessories/hardware:	
12” swing spout	K-15179-A
ADA Lever handle is ADA compliant	

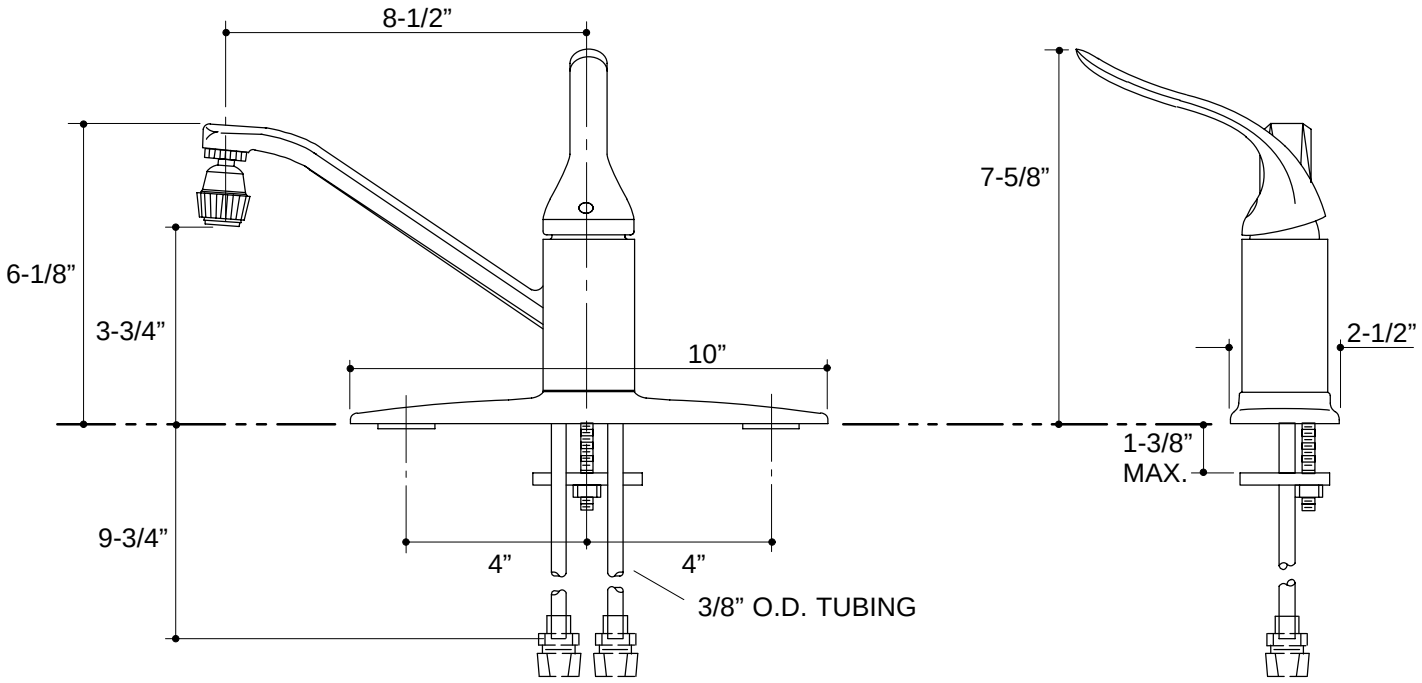

K-15174 Coralais™ Kitchen Sink Faucet
115356-1-**AA** (9619)

KOHLER®

NOTES: