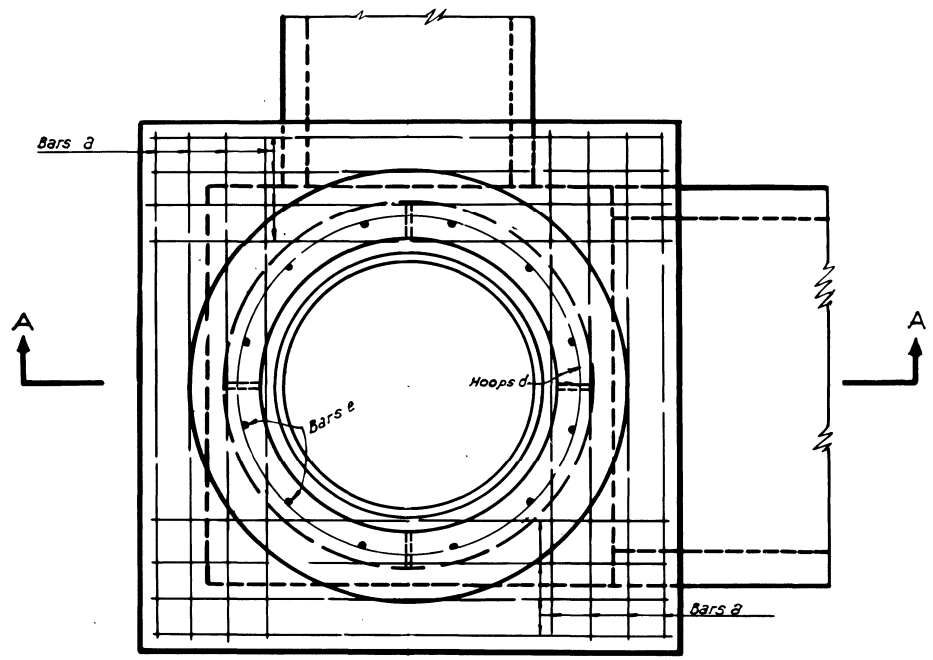

PLAN SHOWING REINFORCING IN TOP OF MANHOLE

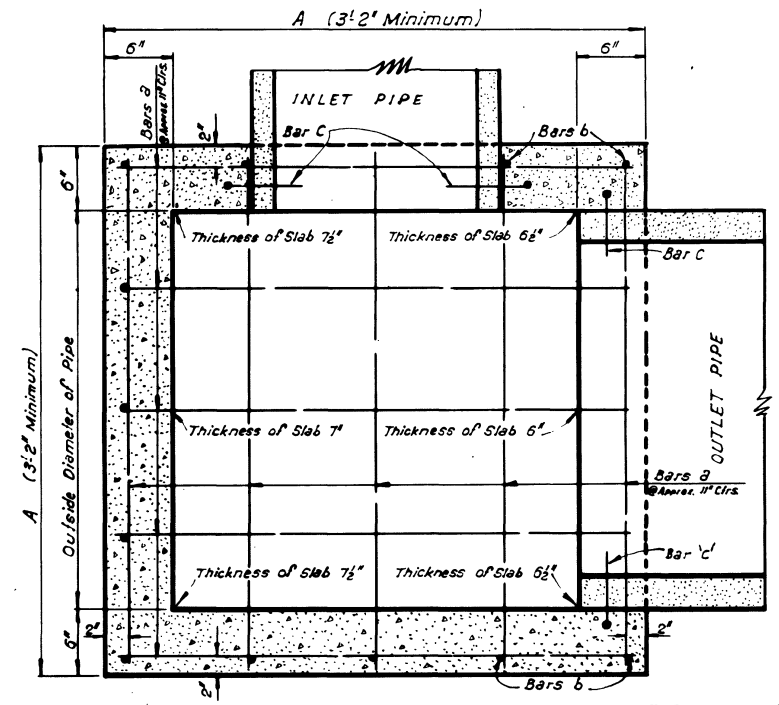

SECTION SHOWING REINFORCING IN BOTTOM SLAB

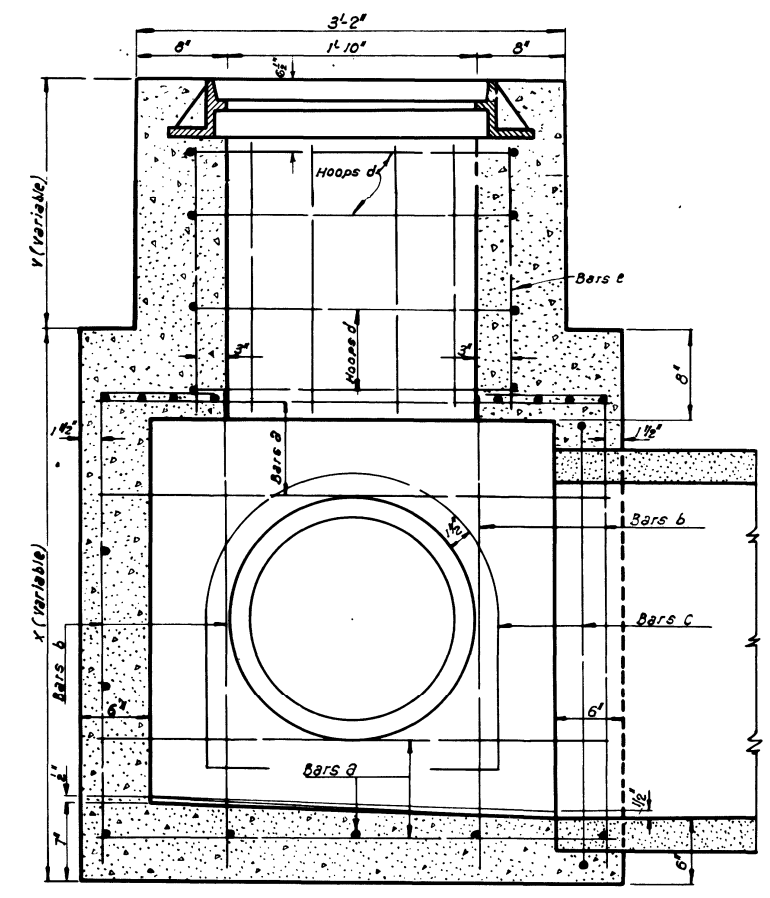

SECTION A-A

CAST IRON COVER NOT SHOWN

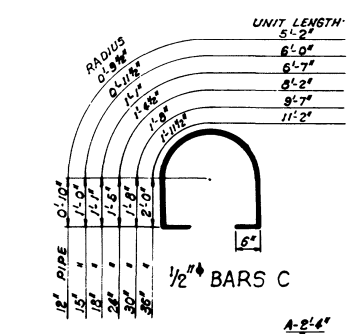

½"ϕ BARS C

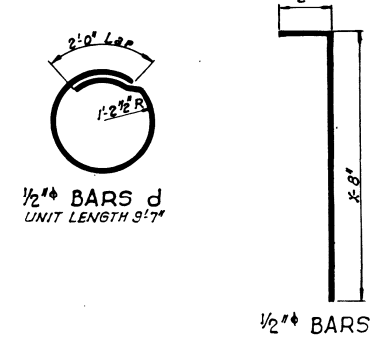

½"ϕ BARS d
UNIT LENGTH 9'-7"

½"ϕ BARS b

Note: Type No. WP B24M Cover and Frame by McKinley Iron Works, Fort Worth, Texas or Approved Equal.

Note: The Contractor will not pour above the bottom of the Slab until the paving adjacent to the Basin has been completed.

BILL OF MATERIALS FOR ONE MANHOLE X = 4'-2" (AS DETAILED)

MARK	SIZE	SPACING	NO. REQUIRED	UNIT LENGTH	LOCATION
Bars a	½"ϕ	Approx. 11"	10	A - 3"	Longitudinal and Transverse in Bottom Slab
" a	"	" 11"	Depending on No. & Size of Pipes	A - 3"	" " " " Walls of Box
" a	"	3"	" " " " "	A - 3"	" " " " Top Slab of Box
" b	"	Approx. 11"	" " " " " "	See Bending Diagram	Vertical in Walls of Box
Hoops c	"		1 each Pipe	" " "	Around each Pipe as Shown
" d	"	9" Max.	$\frac{V+3\frac{1}{2}"}{9"}$ + 1	9'-7"	Hoops in Walls of Cylinder
Bars e	"	30° Radius	12	V + 4½ - Pvt. Thickness	Vertical in Walls of Cylinder
1 Cast Iron Cover Seal					
1 Cast Iron Cover					

Date	Description	By
4-6-76	Note on Pouring Sequence	W.T.J.

REVISIONS

STANDARD PLAN
R.C. MANHOLE
36" MAXIMUM PIPE CONNECTION
Date: Mar. 1958 PRESSURE TIGHT

R-CB-11X

STATE OF LOUISIANA
DEPARTMENT OF HIGHWAYS

DESIGNED G.A. Hester | DETAILED G.A. Hester | TRACED Burford
CHECKED [illegible] | CHECKED [illegible] | CHECKED [illegible]
IN CHARGE OF Original Signed by Chief Engineer HEAD ROAD DESIGN

R-CB-11X