PARKING REQUIREMENTS:

DAY-CARE	1 FOR EACH 200 S.F. GROSS AREA
RESTAURANTS	1 FOR EACH 100 S.F. GROSS AREA.
RETAIL SALES	1 FOR EACH 200 S.F. GROSS AREA
	(IF HAS WAREHOUSE EXCLUDE WAREHOUSE S.F.)
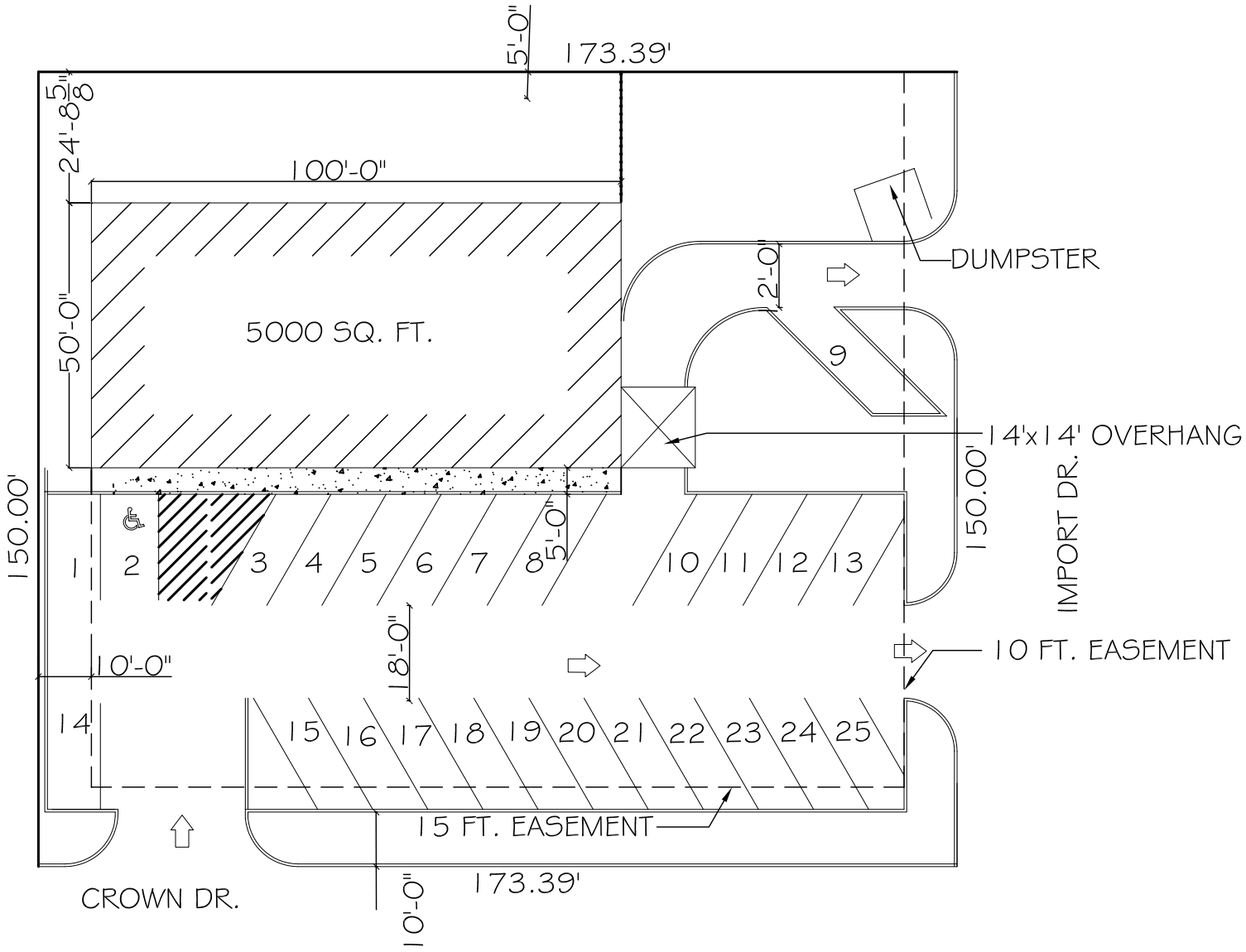
WITHOUT RESTAURANTS, 5,000 / 200 = 25 SPACES
IN ADDITION, SECTION 6-4 REQUIRES TWO OFF-STREET LOADING SPACES. THESE SPACES CAN NOT BE COUNTED AS PART OF THE OFF-STREET PARKING.