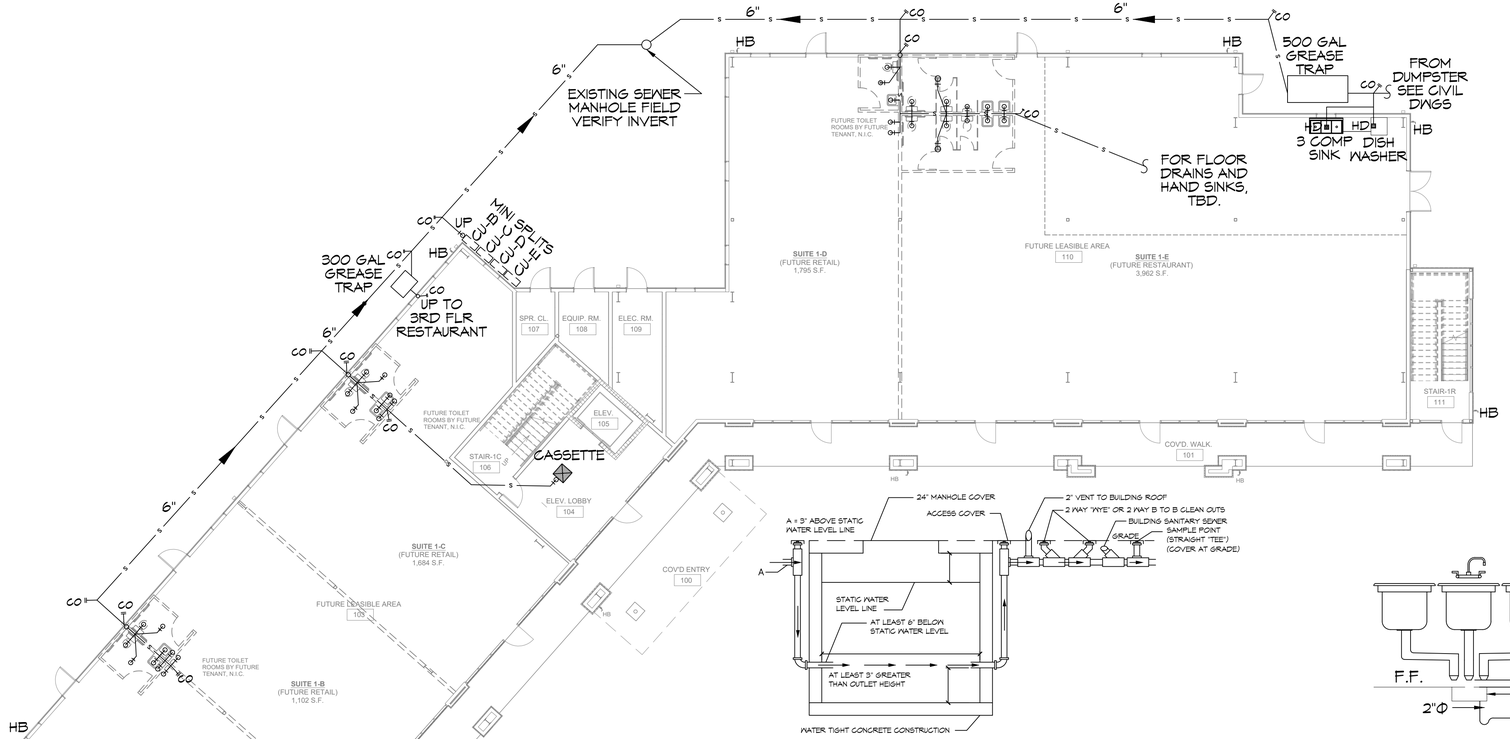

1 FIRST FLOOR PLUMBING PLAN
SCALE: 3/32"=1'-0"

TYPICAL GREASE TRAP WITH ONE MANHOLE COVER AND EXTERNAL ACCESS COVERS
N.T.S.

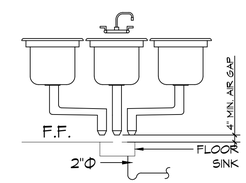

HUB DRAIN
N.T.S.

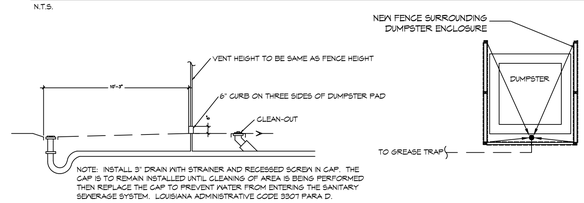

DUMPSTER SECTION
N.T.S.

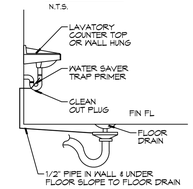

FLOOR DRAIN
N.T.S.

GENERAL PLUMBING NOTES

1. PLUMBING LINES SHOWN ARE DRAWN DIAGRAMMATIC IN NATURE AND REPRESENT CONCEPTUAL ROUTING ONLY. CONTRACTOR IS RESPONSIBLE FOR FIELD VERIFICATION OF ALL ACTUAL CONDITIONS.
2. PROVIDE ALL LABOR, MATERIAL, TRANSPORTATION, SUPERVISION, CLEAN-UP, SERVICES, AND EQUIPMENT FOR A COMPLETE OPERATING SYSTEM. THE SYSTEM SHALL INCLUDE HOT AND COLD WATER PIPING, SEWER AND VENT PIPING, INSULATION, WATER HEATER, HANGERS, VALVES, SUPPORTS WITHOUT ANY RESTRICTIONS TO VOLUME. CUT AND PATCH AS REQUIRED TO INSTALL PIPES.
3. ALL WORK AND MATERIAL SHALL CONFORM STRICTLY TO THE LATEST LOCAL CITY, PARISH, STATE AND NATIONAL GOVERNING CODES. MUST MEET LA STATE PLUMBING CODE 2013 REQUIREMENTS.
4. CONTRACTOR IS TO FIELD VERIFY ALL EXISTING UTILITY LOCATIONS, ELEVATIONS AND SIZES PRIOR TO COMMENCING ANY WORK. CONTRACTOR SHALL PAY NECESSARY FEES FOR THE UTILITIES CONNECTIONS.
5. CONTRACTOR IS RESPONSIBLE TO VERIFY THE EXISTING INVERTS AND SET NEW INVERTS OF SEWERAGE AND DRAINAGE PIPES.
6. SEWERAGE LINES 3-INCH AND SMALLER SHALL BE SLOPED 1/4" PER FOOT AND LINES 4-INCH AND LARGER SHALL BE 1/8" PER FOOT.
7. TEST ALL PIPING AT REQUIRED PRESSURE.
8. ALL PLUMBING SHALL BE CLOSELY COORDINATED WITH STRUCTURAL, MECHANICAL SYSTEM AND ELECTRICAL SYSTEMS TO INSURE NO TRADES WILL CONFLICT WITH EACH OTHER.
9. DO NOT SCALE DRAWINGS. SEE ARCHITECTURAL DRAWINGS FOR EXACT LOCATIONS OF DOORS, WINDOWS, WALLS, FIXTURES, ETC.
10. ALL WATER MAINS AND PIPING NOT SHOWN FOR CLARITY, ALL LOCATIONS FIELD VERIFIED.
11. DOMESTIC HOT AND COLD WATER PIPING AND FITTINGS UNDER SLAB SHALL BE ASTM B88 COPPER WATER TUBE, TYPE K, SOFT ANNEALED. NO JOINTS SHALL BE ALLOWED UNDER THE SLAB.
12. DOMESTIC WATER PIPING AND FITTINGS ABOVE THE SLAB SHALL BE ASTM B88 COPPER WATERTUBE, TYPE L. HARD DRAWN WITH COPPER PRESSURE TYPE FITTINGS, ANSI B16.22. THE JOINTS SHALL BE SOLDERED TYPE USING ASTM B32, ALLOY GRADE 95A (95-5) SOLDER.
13. SOIL, WASTE, VENT PIPING AND FITTINGS ABOVE THE SLAB SHALL BE SERVICE WEIGHT CAST IRON PIPE WITH BELL AND SPIGOT ENDS AND ONE PIECE NEOPRENE INSERT TYPE GASKET. USE PVC SCHEDULE 40 OR ABS DWV PIPES AND FITTINGS WHERE PERMITTED BY CODE.
14. ALL WATER PIPING AND FITTINGS ABOVE THE FLOOR SHALL BE INSULATED WITH 1/2" THICK FIBERGLASS INSULATION AND JACKET.
15. ALL ELECTRICAL, MECHANICAL AND PLUMBING ELEMENTS PENETRATING FIRE PARTITIONS SHALL BE FIRE CAULKED. (PENETRATIONS THROUGH RATED CONSTRUCTION SHALL BE SEALED WITH A MATERIAL CAPABLE OF PREVENTING THE PASSAGE OF FLAMES AND HOT GASES WHEN TESTED IN ACCORDANCE WITH ASTM-E814.)
16. SEE ROOF PLAN FOR PLUMBING ROOF PENETRATIONS. ROUTE VENT PIPES IN ATTIC AS NECESSARY.
17. ALL VENTS THROUGH ROOF (VTR) SHALL BE LOCATED A MINIMUM OF 10'-0"FROM ANY MECHANICAL OR NATURAL AIR INTAKE.

PLUMBING ABBREVIATIONS

HS	HAND SINK	MS	MOP SINK
LAV	LAVATORY	WH	WATER HEATER (PLACED IN ATTIC
WC	WATER CLOSET		

LEGEND

SYMBOL	DESCRIPTION
—— S —— S ——	SEWER LINE
—— V —— V ——	VENT PIPE
	ELBOW UP
FD	FLOOR DRAIN
—CO	CLEAN OUT

PLUMBING FIXTURE SCHEDULE

MK	DESCRIPTION	TYPE	ROUGH - IN - SIZE				NOTES
			WASTE	VENT	COLD	HOT	
WC	WATER CLOSET	VALVE	4"	3"	1-1/2"	-	3
UR	URINAL	VALVE	3"	2"	3/4"	-	3
LAV	LAVATORY	WALL HUNG	2"	2"	3/4"	3/4"	1,2,3
SH	SHOWER	-	2"	2"	3/4"	3/4"	5
FD	FLOOR DRAIN	-	3"	2"	-	-	4
HS	HAND SINK	-	3"	2"	3/4"	3/4"	-
MS	MOP SINK	-	3"	2"	3/4"	3/4"	-
WH	WATER HEATER	-	3/4"	2"	3/4"	3/4"	-
AHU	AIR HANDLER DRAIN	-	3/4"	2"	-	-	-

NOTES:
1. INSULATE PIPING FOR HANDICAP FIXTURE.
2. PROVIDE CHAIR CARRIER FOR WALL HUNG FIXTURE.
3. HANDICAP FIXTURE
4. INSTALL CONTINUOUS DRIP VALVE ON ALL FLOOR DRAINS.
5. PROVIDE ASSE 1016 COMPLIANT VALVE - FOR ALL SHOWERS
6. PROVIDE ASSE 1070 COMPLIANT MIXING VALVE - FOR ALL LAVATORIES/SINKS

NOTE:
ALL PLUMBING IS DRAWN DIAGRAMMATICALLY FOR CLARITY

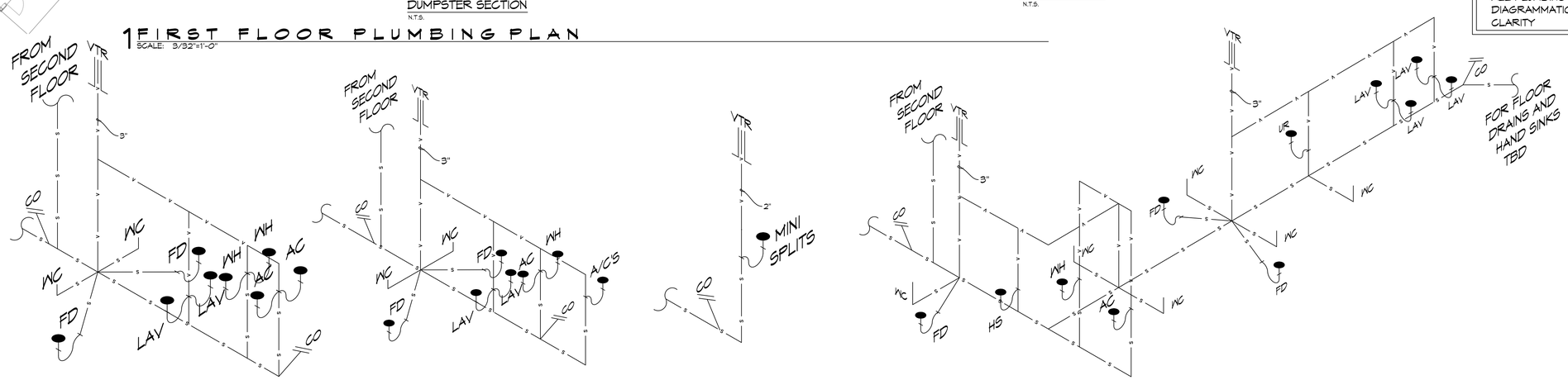

2 #1 A/B RISER
SCALE: N.T.S.

3 #1 C RISER
SCALE: N.T.S.

4 MINI SPLITS
SCALE: N.T.S.

5 #1 D/E RISER
SCALE: N.T.S.

DAMMON ENGINEERING, INC.
LOUISIANA & MISSISSIPPI
www.dammonengineering.com
info@dammonengineering.com
PH: 985.649.5832
Chief Engineer: Brian Mistich, PE
554 Old Spanish Trail
Slidell, LA 70458

#	DESCRIPTION	DATE

REVISIONS

SEAL:

MIXED USE DEVELOPMENT
I-10 SOUTH SERVICE ROAD
METAIRIE LOUISIANA

JOB No:	DATE:
DRAWN BY: GKD	CHECKED BY: BAM 01-27-2025

The design & drawings are given as a courtesy, remain part of the exclusive intellectual property of Dammon Engineering, and are not to be used for any purpose other than the original intent without written permission. Reproducing, copying, or distributing these drawings or specifications constitutes a violation of the Louisiana Revised Statutes Title 37 Chapter 38 Section 3151 and 3152 and is subject to civil and criminal penalties.

SHEET TITLE:
FIRST FLOOR PLUMBING PLAN AND RISER DIAGRAM

DRAWING NUMBER:
P101

SHEET No: 1 of 15