KOHLER®
SERVICE PARTS

CIRRUS™ DECK-MOUNT PERSONAL SHOWER SYSTEM
K-7913-**-AA
K-7913-**-BA

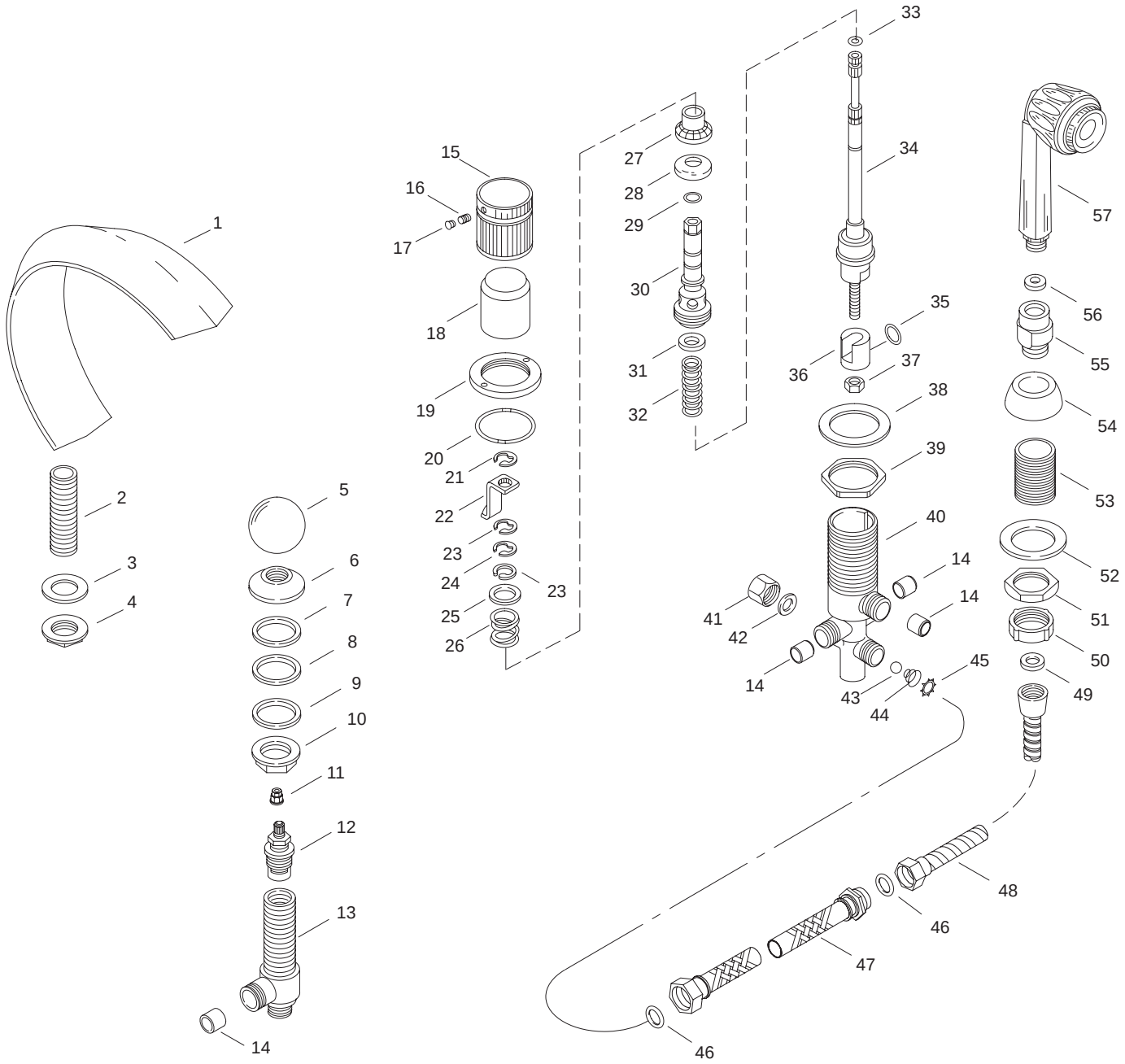

Variation and/or finish/color code may be required when ordering.

KOHLER CO., KOHLER WISCONSIN U.S.A.

KOHLER® SERVICE PARTS

CIRRUS™ DECK-MOUNT PERSONAL SHOWER SYSTEM
K-7913-**-AA
K-7913-**-BA

SERVICE PARTS

ITEM NO.	PART NO.	DESCRIPTION
1	21213	Spout, C-Shaped Bath
2	23079	Pipe, 3/4' x 3-7/16"
3	41219	Washer
4	22531	Nut, 3/4"-14 NPSM
5	55149	Handle Assembly, Cirrus
6	50321	Escutcheon, Bath, Cirrus
7	22351	Locknut
8	22352	Friction Washer
9	22400	Washer
10	22346	Gasket
11	22325	Spline Insert
12	22376	Ceramic Valve, Counterclockwise Close
	22377	Ceramic Valve, Clockwise Close
13	55041	Valve Assembly, Side - 3/4"
14	55766	Reducer Bushing
15	52714	Handle Assembly
16	34453	Screw, .164-32 UNC - 3A
17	52723	Hole Plug
18	52665	Sleeve
19	52666	Flange
20	48686	O-Ring
21	50593	E-Ring
22	50338	Detent
23	50541	E-Ring
24	54997	Clip, Retaining
25	54996	Washer
26	54995	Spring
27	55003	Backing Ring, Diaphragm
28	55004	Diaphragm
29	55110	O-Ring, -015 x .551
30	55006	Valve Seat
31	55413	Washer
32	54998	Spring
33	55109	O-Ring, -011 x .301
34	59239	Stem Subassembly
35	55108	O-Ring, -112 x .487
36	55001	Spool
37	57088	Lock Nut, Hex Jam, 5/16"-18
38	54994	Washer
39	55002	Nut, 1.75 - 16 UNS - 2B
40	55007	Valve Body
41	52745	Hex Cap
42	40295	Fiber Washer
43		Available in Service Kit Only
44		Available in Service Kit Only
45		Available in Service Kit Only
46	40295	Washer
47	52600	Hose, High Pressure
48		Available in Service Kit Only
49	41163	Washer
50	52593	Cap Nut, Plastic
51	52595	Nut, 1.187-20 UN-2B
52	52596	Washer, Brass
53	52594	Tube, Threaded Brass
54	52848	Escutcheon
55	73260	Coupling
56	56132	Washer
57	57998	Persona Handshower

SERVICE KITS

PART NO.	ITEM NO.	QTY.	DESCRIPTION
23165			Mounting Hardware Assembly
	7	2 ea.	Locknut
	8	2 ea.	Friction Washer
	9	2 ea.	Washer
	10	2 ea.	Gasket
55767			Reducer Bushing Kit
	14	7 ea.	Reducer Bushing
54991			Diverter Valve Assembly
	21	1 ea.	E-Ring
	22	1 ea.	Detent
	23	1 ea.	E-Ring
	24	1 ea.	Clip, Retaining
	25	1 ea.	Washer
	26	1 ea.	Spring
	27	1 ea.	Backing Ring, Diaphragm
	28	1 ea.	Diaphragm
	29	1 ea.	O-Ring, -015 x .551
	30	1 ea.	Seat
	31	1 ea.	Washer
	32	1 ea.	Spring
	33	1 ea.	O–Ring, -011 x .301
	34	1 ea.	Stem
	35	1 ea.	O-Ring, -112 x .487
	36	1 ea.	Spool
	37	1 ea.	Lock Nut, Hex Jab, 5/16"-18
	38	1 ea.	Washer
	39	1 ea.	Nut, 1.75 - 16 UNS - 2B
	40	1 ea.	Valve Body
	43	1 ea.	Ball, Check
	44	1 ea.	Spring, Conical
	45	1 ea.	Retaining Ring
57381			Diverter Subassembly
	21	1 ea.	E-Ring
	22	1 ea.	Detent
	23	1 ea.	ERring
	24	1 ea.	Clip, Retaining
	25	1 ea.	Washer
	26	1 ea.	Spring
	27	1 ea.	Backing Ring, Diaphragm
	28	1 ea.	Diaphragm
	29	1 ea.	O-Ring, -015 x .551
	30	1 ea.	Valve Seat
	31	1 ea.	Washer
	32	1 ea.	Spring
	33	1 ea.	O–Ring, -011 x .301
	34	1 ea.	Stem Subassembly
	35	1 ea.	O-Ring, -112 x .487
	36	1 ea.	Spool
	37	1 ea.	Lock Nut, Hex Jam, 5/16"-18
54993			Valve Seat Subassembly Kit
	24	1 ea.	Clip, Retaining
	25	1 ea.	Washer
	26	1 ea.	Spring
	27	1 ea.	Backing Ring, Diaphragm
	28	1 ea.	Diaphragm
	29	1 ea.	O-Ring, -015 x .551
	30	1 ea.	Valve Seat
57386			O-Ring and Diaphragm Kit
	27	1 ea.	Backing Ring, Diaphragm
	28	1 ea.	Diaphragm
	33	1 ea.	O–Ring, -011 x .301
	35	1 ea.	O-Ring, -112 x .487
54992			Stem & Spool Subassembly
	31	1 ea.	Washer
	32	1 ea.	Spring
	33	1 ea.	O–Ring, -011 x .301
	34	1 ea.	Stem Subassembly
	35	1 ea.	O-Ring, -112 x .487
	36	1 ea.	Spool
	37	1 ea.	Lock Nut, Hex Jam, 5/16"-18
59237			Check Valve Kit
	43	1 ea.	Ball, Check
	44	1 ea.	Spring, Conical
	45	1 ea.	Retaining Ring
21481			Interlock Hose & Washers
	46	2 ea.	Washer
	48	1 ea.	Interlock Hose, 69"

Variation and/or finish/color code may be required when ordering.

KOHLER CO., KOHLER WISCONSIN U.S.A.