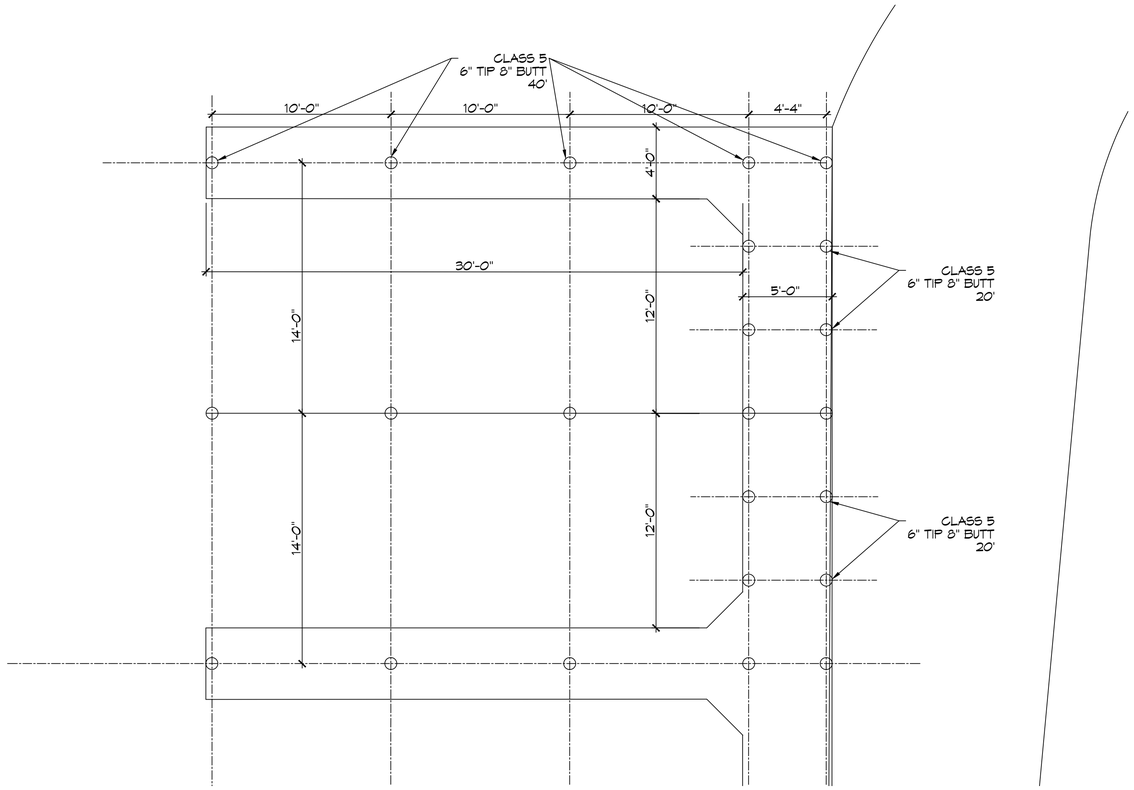

1 PROPOSED BOAT HOUSE SITE PLAN
SCALE: 1" = 40'-0"

ZONING

PF-3 PUBLIC FACILITY

BOAT HOUSE SQ. F.T.

24,000 (TWENTY FOUR THOUSAND)

BULKHEAD

585 LINEAR FEET OF NEW BULKHEAD

DESIGN CRITERIA

THE CONSTRUCTION FOR SAID RESIDENCE, WHERE BASIC WIND SPEED IS 140 MILES PER HOUR, WIND EXPOSURE ZONE C, IS DESIGNED IN ACCORDANCE WITH: AMERICAN FOREST AND PAPER ASSOCIATION (AF&PA) WOOD FRAME CONSTRUCTION MANUAL FOR ONE AND TWO FAMILY DWELLINGS (WFCM) 2001 EDITION AS WELL AS THE INTERNATIONAL RESIDENTIAL CODE (IRC) 2021 EDITION

SHEET INDEX

SHEET #	SHEET TITLE
C101	BOAT HOUSE SITE PLAN
C102	EROSION CONTROL AND DETAILS
S101	PARTIAL DOCK/PILING PLAN AND ROOF FRAMING PLAN
S102	BOAT HOUSE SECTION AND BULKHEAD SECTION

DAMMON ENGINEERING, INC.
LOUISIANA & MISSISSIPPI
www.dammonengineering.com
info@dammonengineering.com
PH: 985.649.3832
Chief Engineer: Brian Mistich, PE
5540 Crossroads Trail
Slidell, LA 70458

#	DESCRIPTION	DATE
	REVISIONS	

SEAL:

NEW BULKHEAD AND BOAT HOUSES

TCHEFUNCTA CLUB ESTATES

2 PINECREST DRIVE
COVINGTON, LA 70433

JOB No:	2025	DATE:	02-11-25
DRAWN BY:	CKD	CHECKED BY:	BAM

THIS DRAWING IS PROPERTY OF DAMMON ENGINEERING, INC. AND MAY NOT BE REPRODUCED OR USED FOR OTHER PROJECTS EXCEPT BY AGREEMENT WITH THE PROPERTY OF DAMMON ENGINEERING, INC. AND MUST BE RETURNED UPON REQUEST. THIS DRAWING IS THE PROPERTY OF DAMMON ENGINEERING, INC. AND MUST BE RETURNED UPON REQUEST. THE DESIGN SHOWN HEREON AND INTENDED FOR THE SPECIFIED PROJECT WAS PREPARED FOR THE EXCLUSIVE USE OF THE OWNER OF THE PROJECT. ANY USE OF THIS DESIGN PREPARED FOR A DEVELOPED APPROVAL WITHOUT WRITTEN CONSENT OF DAMMON ENGINEERING, INC. IS PROHIBITED. ANY REPRODUCTION OF THIS DRAWING WITHOUT WRITTEN CONSENT IS PROHIBITED.

SHEET TITLE:
BOAT HOUSE SITE PLAN

DRAWING NUMBER:

C101

SHEET No: 1 of 4

N
W E
S

GRAPHIC SCALE
1 0 5 1
(IN FEET)
1 INCH = 1 FEET

FILE NAME: J:\~ Foundations or Structural Bids\Standards Country Club Marina\New Bulkhead and Boat House\dwg\C101 - Site Plan.dwg PLOT DATE & TIME: Wednesday, February 12, 2025 8:58:00 AM