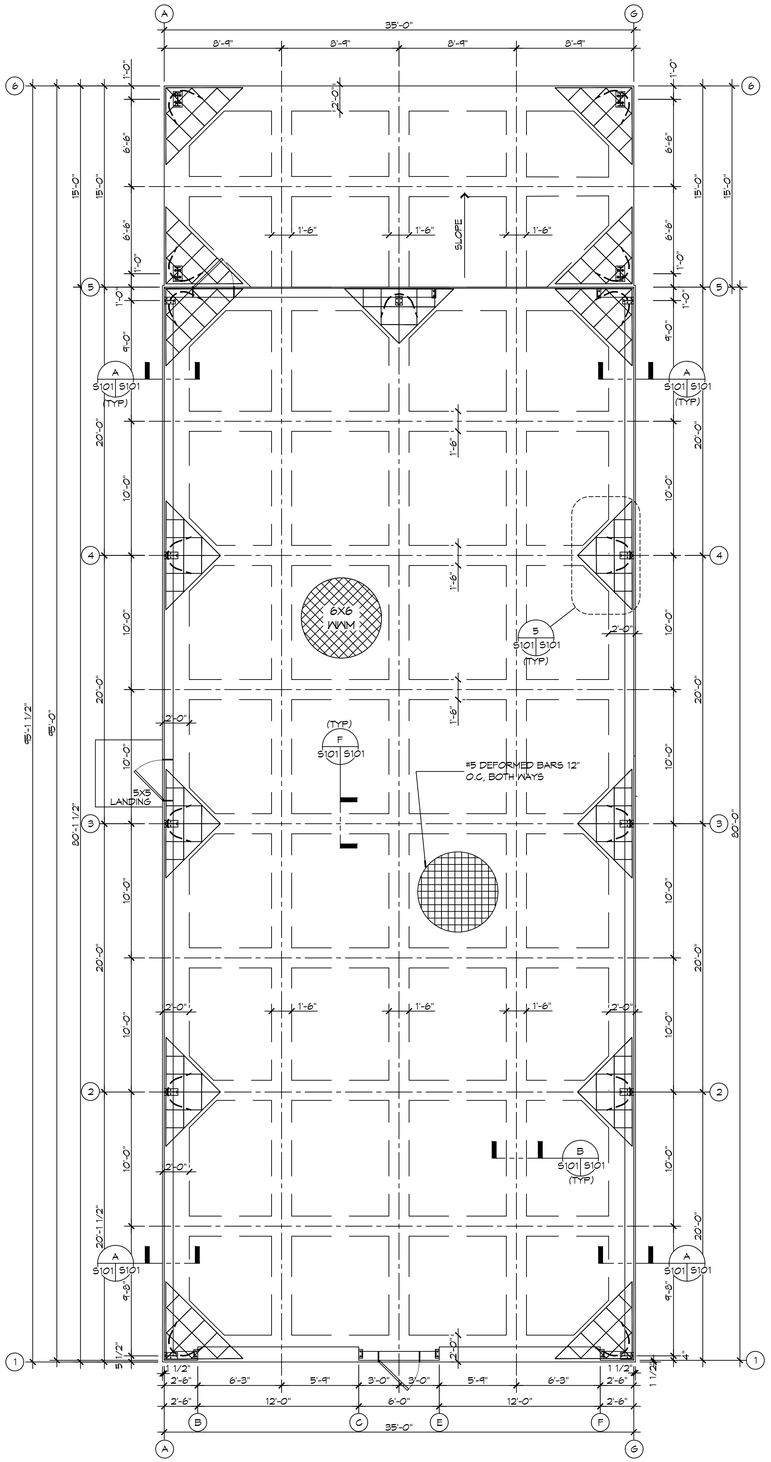

N **4 FOUNDATION PLAN**
SCALE: 3/16" = 1'-0"

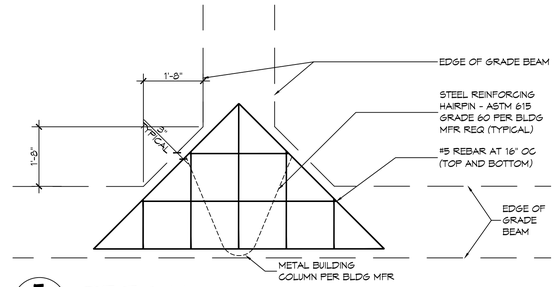

5 S101 S101 **DETAIL**
SCALE: 1/2" = 1'-0"

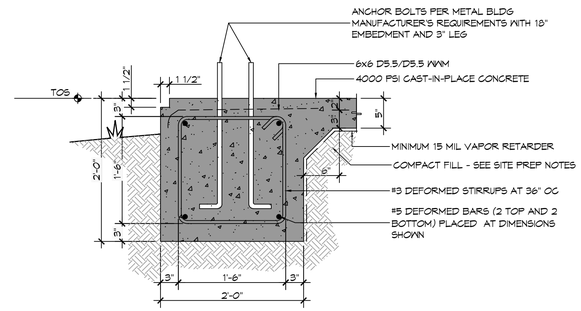

A S101 S101 **SECTION**
SCALE: 1" = 1'-0"

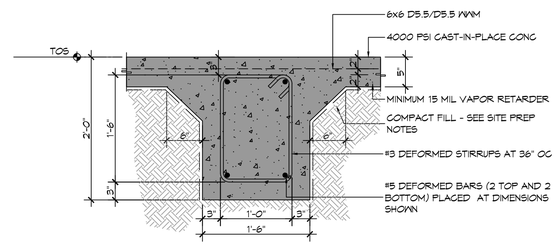

B S101 S101 **SECTION**
SCALE: 1" = 1'-0"

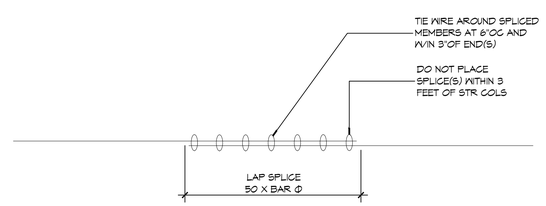

C S101 S101 **DETAIL**
SCALE: 1" = 1'-0"

GENERAL FOUNDATION NOTES

1. THE CONCRETE MIX SHALL HAVE A MINIMUM COMPRESSIVE STRENGTH OF 4000 PSI AT 28 DAYS. CONCRETE MIX SHALL BE IN ACCORDANCE WITH ACI-318.
2. ALL CONVENTIONAL REINFORCING SHALL MEET ASTM-A615 (GRADE 60).
3. ONE LAYER OF POLYETHELENE VAPOR BARRIER SHALL BE PLACED UNDER ALL CONCRETE. VAPOR RETARDER TO BE 15 MIL. STRENGTH; ASTM E1745 CLASS A, PERMEANCE LESS THAN 0.01 PERMS, EQUAL TO STEGO INDUSTRIES STEGO WRAP ECO-SHEILD-E 15 MIL. BY EPRO OR IRONBAR 15 BY FLATIRON FILMS. PROVIDE APPROPRIATE ACCESSORIES FOR A COMPLETE SYSTEM.
4. ALL REINFORCING STEEL AND MESH SHALL BE SECURELY SUPPORTED TO PREVENT BOTH VERTICAL AND HORIZONTAL MOVEMENT DURING CONCRETE PLACEMENT.
5. THE CONTRACTOR SHALL VERIFY ALL DROPS, OFFSETS, CMU LEDGES, DIMENSIONS, AND CONFIGURATIONS. CONTRACTOR MUST BE RESPONSIBLE FOR SAME.
6. VERIFY ALL PLUMBING ROUGH-IN LOCATIONS & ELECTRICAL ROUGH-IN LOCATIONS.
7. GRADE BEAM SIZES MAY VARY BY -5% TO +20%.
8. ALL SUBGRADE FILL SHALL BE SELECT GRANULAR MATERIAL COMPACTED TO 95% STANDARD PROCTOR DENSITY IN A MAXIMUM OF 6" LIFTS.
9. A MINIMUM OF 5" CONCRETE THICKNESS SHALL BE MAINTAINED THROUGHOUT THE SLAB.
10. ALL RUNOFF WATER MUST BE CARRIED AWAY FROM THE SLAB TO PREVENT SATURATION OF THE SUB-BASE.
11. ALL TREES WITHIN CLOSE PROXIMITY SHALL BE REMOVED TO PREVENT THE ROOTS FROM EXTENDING UNDER THE SLAB.
12. PROVIDE AND MAINTAIN IMMEDIATE SITE DRAINAGE BEFORE, DURING, AND AFTER CONSTRUCTION. PROVIDE GRADING, SWELLS, AND SUMP PUMPS AS MAY BE REQUIRED TO IMMEDIATELY DRAIN ALL RAINWATER FROM THE CONSTRUCTION AREA. FOOTING EXCAVATIONS SHOULD BE OBSERVED AND CONCRETE TO BE PLACED AS QUICKLY AS POSSIBLE TO AVOID EXPOSURE OF THE FOOTING BOTTOMS TO WETTING AND DRYING. SURFACE RUNOFF WATER SHOULD BE DRAINED AWAY FROM THE EXCAVATIONS AND NOT BE ALLOWED TO POND PRIOR TO OR AFTER CONCRETE PLACEMENT. IF IT IS REQUIRED THAT A FOOTING EXCAVATION BE LEFT OPEN FOR MORE THAN ONE DAY, IT SHOULD BE PROTECTED TO REDUCE EVAPORATION OR ENTRY OF MOISTURE.
13. NEW SPREAD CONCRETE FOOTINGS AND CONTINUOUS FOOTINGS, BEARING ON COMPACTED STRUCTURAL FILL, AT LEAST 2 FEET BELOW FINISHED GRADE, SHOULD BE DESIGNED FOR MAXIMUM NET ALLOWABLE BEARING PRESSURES OF 1,200 PSF AND 2,000 PSF RESPECTIVELY, BASED ON DEAD LOADS AND DESIGN LIVE LOADS.
14. TREAT SOIL BELOW SLAB FOR TERMITES.

GENERAL SITEPREP NOTES

1. THE GC SHALL EMPLOY A GEOTECHNICAL ENGINEER TO MONITOR SITE CONDITIONS DURING THE PREP WORK OF THE SITE FOUNDATION. REMOVE EXISTING NEAR SURFACE TOPSOIL WITH ORGANICS AND OTHER DELETERIOUS MATERIALS, APPROXIMATELY 8 TO 10 INCHES HOWEVER THE ACTUAL STRIPPING DEPTH SHALL BE DETERMINED BY A GEOTECHNICAL ENGINEER. THE EXPOSED SUBGRADE IN THE BUILDING AREA SHALL BE PROOF-ROLLED WITH A RUBBER TIRED VEHICLE WEIGHING ABOUT 20 TONS; PROOF-ROLLING SHALL BE MONITORED BY A GEOTECHNICAL ENGINEER. ANY SOILS WHICH ARE OBSERVED TO RUT OR DEFLECT EXCESSIVELY UNDER THE MOVING LOAD SHOULD BE UNDERCUT AND REPLACED WITH COMPACTED STRUCTURAL FILL. MUCK OUT AND FILL 24" MINIMUM,
2. THE STRUCTURAL FILL SHALL BE SELECT GRANULAR MATERIAL AND SHALL BE PLACED IN MAXIMUM LIFTS OF EIGHT (8) INCHES OF LOOSE MATERIAL, COMPACTED WITHIN THE RANGE OF ONE (1) PERCENTAGE POINT BELOW TO THREE (3) PERCENTAGE POINTS ABOVE THE OPTIMUM MOISTURE CONTENT VALUE. IF WATER MUST BE ADDED, IT SHALL BE UNIFORMLY APPLIED AND THOROUGHLY MIXED INTO THE SOIL BY DISKING OR SCARIFYING. EACH LIFT OF COMPACTED STRUCTURAL FILL SHALL BE TESTED BY A REFRESENTATIVE OF THE GEOTECHNICAL ENGINEER PRIOR TO PLACEMENT OF SUBSEQUENT LIFTS. IN-PLACE DENSITY MEASUREMENTS SHALL BE TAKEN TO ASSURE THAT THE ABOVE DEGREE OF COMPACTION IS ACHIEVED. THE COMPACTED STRUCTURAL FILL SHALL EXTEND FIVE (4) FEET BEYOND THE PERIMETER OF THE BUILDING PRIOR TO SLOPING.
3. ALL RUNOFF WATER MUST BE CARRIED AWAY FROM THE SLAB TO PREVENT SATURATION OF THE SUB-BASE.
4. ALL TREES WITHIN CLOSE PROXIMITY SHALL BE REMOVED TO PREVENT THE ROOTS FROM EXTENDING UNDER THE SLAB.
5. PROVIDE AND MAINTAIN IMMEDIATE SITE DRAINAGE BEFORE, DURING, AND AFTER CONSTRUCTION. PROVIDE GRADING, SWELLS, AND SUMP PUMPS AS MAY BE REQUIRED TO IMMEDIATELY DRAIN ALL RAINWATER FROM THE CONSTRUCTION AREA. FOOTING EXCAVATIONS SHOULD BE OBSERVED AND CONCRETE PLACED AS QUICKLY AS POSSIBLE TO AVOID EXPOSURE OF THE FOOTING BOTTOMS TO WETTING AND DRYING. SURFACE RUNOFF WATER SHOULD BE DRAINED AWAY FROM THE EXCAVATIONS AND NOT BE ALLOWED TO POND PRIOR OR AFTER CONCRETE PLACEMENT. IF IT IS REQUIRED THAT A FOOTING EXCAVATIONS BE LEFT OPEN FOR MORE THAN ONE DAY, THEY SHOULD BE PROTECTED TO REDUCE EVAPORATION OR ENTRY OF MOISTURE.

DAMMON ENGINEERING, INC.
LOUISIANA & MISSISSIPPI
www.dammonengineering.com
info@dammonengineering.com
PH: 985.649.5832
Chief Engineer: Brian Mistich, PE
554 Old Spanish Trail
Slidell, LA 70458

#	DESCRIPTION	DATE
	REVISIONS	

SEAL:

11/8/2023

NEW WAREHOUSE
SEC-SPECIALITY ENHANCED IMAGING
429 SOUTH STREET
SLIDELL, LA 70460

JOB No:	2498	DATE:	07-09-2024
DRAWN BY:	CKD	CHECKED BY:	BAM

This drawing is the property of Dammon Engineering, and copies cannot be made or used without written permission. Dammon Engineering assumes no responsibility for any changes made to this drawing by others. Any alterations made to this drawing must be approved by Dammon Engineering. Report errors and omissions to Dammon Engineering. Read dimensions only. Do not scale drawings. Verify all dimensions and conditions before ordering or fabricating any materials or performing any work. Do not proceed with work if discrepancies are found.

SHEET TITLE:
FOUNDATION PLAN

DRAWING NUMBER:
S101

SHEET No: 4 of 8