FINISH SCHEDULE

ROOM	FLOOR	BASE	CEILING	WALLS	NOTES
WAREHOUSE	BROOM FINISH CONCRETE	N/A	OPEN TO ROOF	METAL PANELS	

DOOR SCHEDULE

MK	WIDTH	HEIGHT	THK	DOOR MAT	FRAME	FR	REMARKS
D01	3'-0"	6'-8"	1-3/4"	STEEL	MTL	NR	INSULATED WITH CLOSER
D02	12'-0"	14'-0"	-	STEEL	MTL	NR	ROLL UP DOOR
D03	12'-0"	14'-0"	-	STEEL	MTL	NR	ROLL UP DOOR
D04	12'-0"	12'-0"	-	-	MTL		CASED OPENING
D05	3'-0"	6'-8"	1-3/4"	MASONITE	WOOD	NR	WITH DOOR CLOUSRE

NOTE: ALL DOORS ARE TO BE FITTED WITH COMMERCIAL GRADE HARDWARE AND HANDLES.

ALL EXTERIOR DOOR ASSEMBLES TO BE RATED FOR 140 MPH WINDS AND SHALL BE MISSILE IMPACT RESISTANT.

DOORS IN A REQUIRED MEANS OF EGRESS SERVING ANY ASSEMBLY AREA HAVING AN OCCUPANT LOAD OF 50 OR MORE PERSONS SHALL NOT BE EQUIPPED WITH A LATCH OR LOCK OTHER THAN PANIC HARDWARE OR FIRE EXIT HARDWARE.

GENERAL NOTES

1. INSULATION AND INSULATION ASSEMBLIES SHALL MEET THE REQUIREMENTS OF IBC 2021 SECTION 720.
   A. CONCEALED INSULATION SHALL HAVE A FLAME SPREAD OF 0-25 AND SMOKE DEVELOPED INDEX OF 0-450.
   B. FACING SHALL COMPLY WITH IBC 2021.
2. ALL MATERIALS SHALL BE NEW AND UL LISTED.
3. NO WORK SHALL BE CONCEALED UNTIL APPROVED BY LOCAL INSPECTORS.
4. CONSTRUCTION SHALL COMPLY WITH ALL PARISH, STATE, AND LOCAL CODES.
5. CONTRACTOR TO GUARANTEE WORK FOR ONE YEAR FROM DATE OF SUBSTANTIAL COMPLETION.
6. CONTRACTOR SHALL FURNISH WATER AND POWER FROM EXISTING SOURCES.
7. EXTERIOR CAULKING SHALL BE THIOKAL CAULK.
8. PAINT SHALL BE SHERWIN WILLIAMS OR EQUIVALENT AND APPROPRIATE FOR THE SUBSTRATE TO WHICH IT IS APPLIED AS RECOMMENDED BY PAINT MANUFACTURER. ALL WORK TO RECEIVE THREE COATS (ONE PRIMER COAT, TWO FINISH COATS) UNLESS OTHERWISE RECOMMENDED BY PAINT MANUFACTUER. COLORS TO BE SELECTED BY OWNER.
9. PROVIDE CLEANUP ON A REGULAR BASIS. NO TRASH SHALL BE STORED INSIDE BUILDING PREMISES.
10. USE 2x6 STUDS, OR TWO 2x4 STAGGERED STUDS WITH 2x6 SILL PLATE AT ALL WALLS WHERE 4" PIPE IS INDICATED. SEE PLUMBING RISER DIAGRAM FOR PIPE SIZE.
11. PROVIDE GALVANIZED METAL PAN WITH DRAIN AT ALL WATER HEATERS.
12. ALL FLOORING SHALL MEET OR EXCEED ADA GUIDELINES REQUIREMENTS FOR SLIP RESISTANCE.
13. INTERIOR LOCKS ON DOORS IN MEANS OF EGRESS SHALL NOT REQUIRE THE USE OF A KEY, SPECIAL KNOWLEDGE, OR SPECIAL DEVICE TO OPEN IN THE DIRECTION OF EGRESS. ALL DOORS SHALL HAVE LEVER TYPE HANDLES.
14. INTERIOR WALLS AND CEILINGS SHALL HAVE A FLAME SPREAD OF 0-200 AND A SMOKE DEVELOPMENT RATING OF 0-450; PER IBC 2015.
15. ALL WORK SHALL COMPLY WITH THE LATEST EDITION OF ALL LOCAL, STATE, AND NATIONAL CODES COVERING THE TYPE OF WORK BEING PERFORMED.
16. PROVIDE PORTABLE FIRE EXTINGUISHERS IN ACCORDANCE WITH NFPA 101. SEE APPENDIX "E" OF NFPA 101 FOR DISTRIBUTION OF EXTINGUISHERS.
17. ALL FIRE WALLS SHALL EXTEND TIGHT TO ROOF DECK AND BE SEALED WITH AN APPROVED FIRE CAULK.
18. ALL ELECTRICAL, MECHANICAL, AND PLUMBING MATERIALS PENETRATING FIRE WALLS SHALL BE FIRE CAULKED. (PENETRATIONS THROUGH RATED CONSTRUCTION SHALL BE SEALED WITH A MATERIAL CAPABLE OF PREVENTING THE PASSAGE OF FLAMES AND HOT GASES WHEN TESTED IN ACCORDANCE WITH ASTM-E814.) SEAL ALL JOINTS, PENETRATIONS, AND ALL OTHER SUCH OPENINGS IN THE BUILDING ENVELOPE THAT ARE SOURCES OF AIR LEAKAGE.
19. SERVICE COUNTERS SHALL HAVE AN ACCESSIBLE WRITING SURFACE IN COMPLIANCE WITH ADAAG ACCESSIBILITY GUIDELINES 2010, SECTION 902.3.

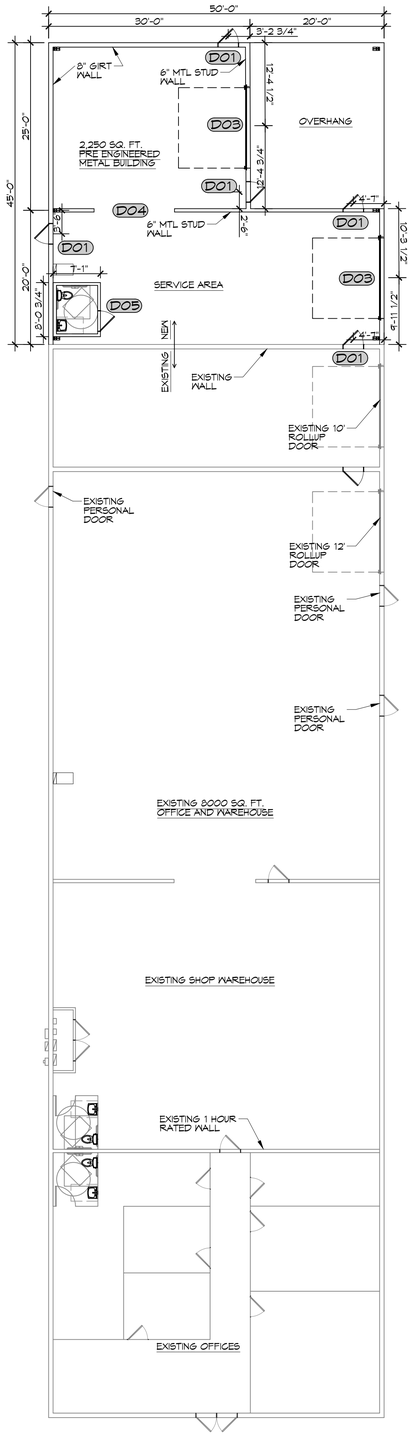

8 WAREHOUSE ADDITION
SCALE: 3/32"= 1'-0" OVERALL PLAN

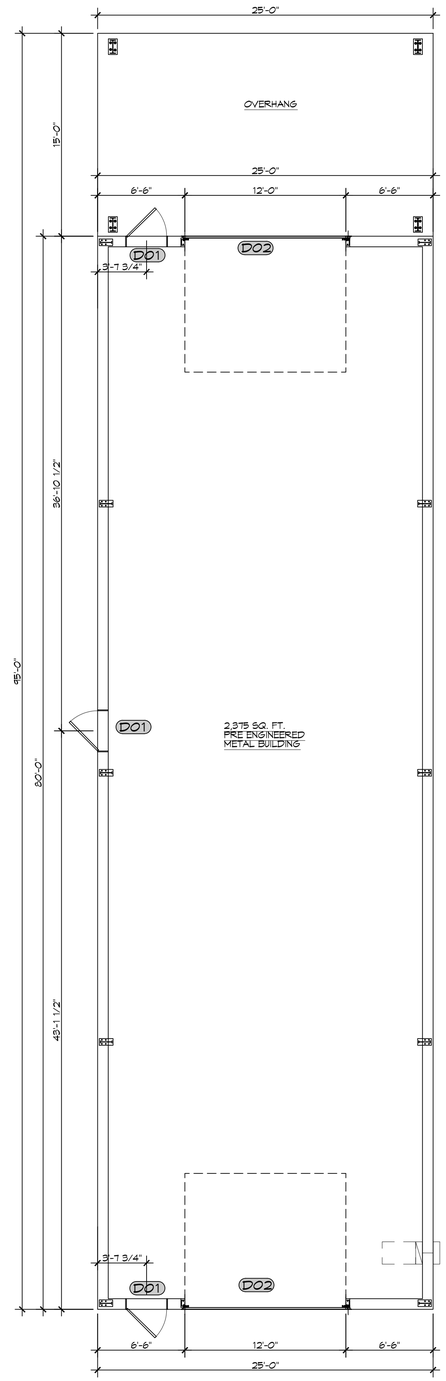

9 NEW WAREHOUSE
SCALE: 3/16"= 1'-0" OVERALL PLAN

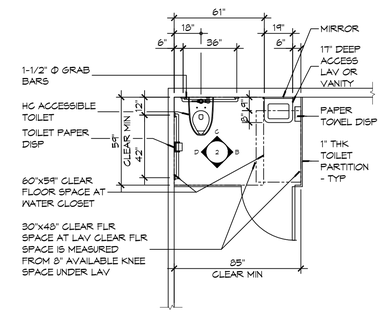

A FLOOR PLAN

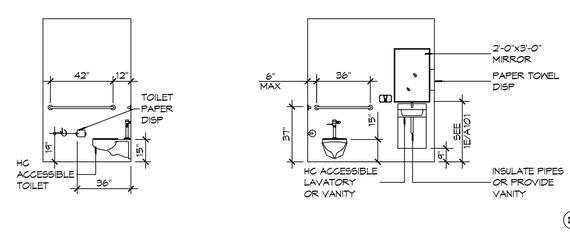

B INTERIOR ELEVATION
C INTERIOR ELEVATION
D INTERIOR ELEVATION

10 RESTROOM CLEARANCES
SCALE: 1/4"=1'-0"

DAMMON ENGINEERING, INC.
LOUISIANA & MISSISSIPPI
www.dammonengineering.com
info@dammonengineering.com
PH: 985.649.5832
Chief Engineer: Brian Mistich, PE
5544 Highway 190 East
Slidell, LA 70458

#	DESCRIPTION	DATE

REVISIONS

SEAL: STATE OF LOUISIANA — BRIAN A. MISTICH, License No. 30187, PROFESSIONAL ENGINEER

NEW WAREHOUSES
J & Y INVESTMENTS LLC
423 SOUTH STREET
SLIDELL, LA 70460

JOB No:	2448
DATE:	08-21-2025
DRAWN BY:	CAD
CHECKED BY:	JVS

THIS DRAWING IS THE PROPERTY OF DAMMON ENGINEERING, INC. AND MUST BE RETURNED ON REQUEST. THIS DRAWING MAY NOT BE REPRODUCED IN WHOLE OR IN PART, NOR SHALL ANY INFORMATION CONTAINED HEREIN BE DISCLOSED TO OTHERS WITHOUT WRITTEN CONSENT OF DAMMON ENGINEERING, INC. THE DESIGNS SHOWN AND DESCRIBED HEREIN ARE THE PROPERTY OF DAMMON ENGINEERING, INC. AND MAY NOT BE REPRODUCED OR EMPLOYED WITHOUT WRITTEN CONSENT OF DAMMON ENGINEERING, INC. ANY REPRODUCTION OR USE WITHOUT WRITTEN CONSENT IS PROHIBITED.

SHEET TITLE:
WAREHOUSE ADDITION AND NEW WAREHOUSE FLOOR PLAN

DRAWING NUMBER:
A101

SHEET No: 6 of 16

FILE NAME: J:\- Office Warehouse\2448 - Bly Bldg 423 South Street Slidell\Drawings\Current Drawings\A101 - Floor Plan.dwg PLOT DATE & TIME: Tuesday, September 2, 2025 1:48:54 PM