KOHLER FAUCETS®

TRITON™ /FINESSE™

LAVATORY FAUCET
K-7401-K
ALSO K-7401

FEATURES

- *Brass construction*
- *For 4” centers*
- *Brass valve bodies*
- *Quarter-turn washerless ceramic disc valves*
- *4” spout*
- *Available with standard or vandal-resistant Water-Guard® aerator*
- *2.0 gallons per minute*
- *Pop-up drain with lift rod and tailpiece*
- *Variety of handle style options*

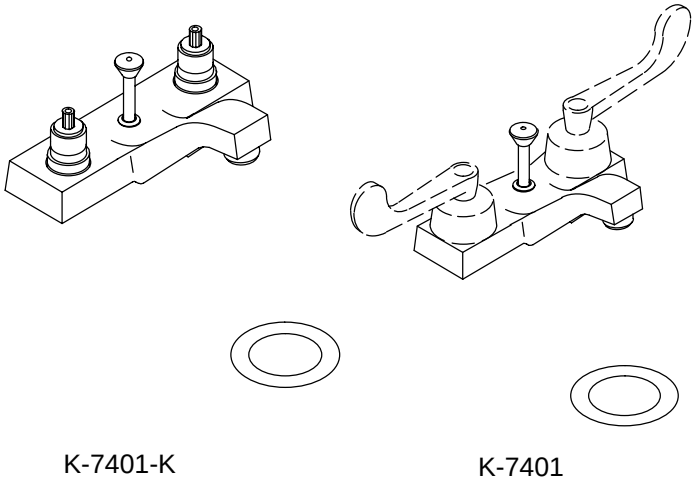

K-7401-K K-7401

CODES/STANDARDS APPLICABLE

Specified model meets or exceeds the following:

- *ASME/ANSI A112.18.1M*
- *CSA B125*
- *Energy Policy Act of 1992*
- *IAPMO/UPC*
- *NSF 61*

COLORS/FINISHES

- CP Polished Chrome
- PB Polished Brass

SPECIFIED MODEL:

BASE FAUCET: For complete faucet, both base faucet and handle choice must be specified.

K-7401-K	With Standard Aerator	☐CP	☐PB
K-7401-KE	With Vandal-Resistant Aerator	☐CP	

Required Accessory (Includes Two Handles)			ADA	ADA	ADA	ADA	
K-16010-2	Triton Standard Handles	☐CP					
K-16010-3	Triton Cross Handles		☐CP				
K-16010-4	Triton Lever Handles			☐CP			
K-16010-5	Triton Wristblade Lever Handles				☐CP		
K-16050-5	Finesse Wrist Control Lever Handles					☐CP	☐PB

COMPLETE FAUCET: Faucet handles included.

Model	**Description**		
K-7401-2A	With Standard Handles and Standard Aerator	☐CP	
K-7401-5A	With Wristblade Handles and Standard Aerator		☐CP

PRODUCT SPECIFICATION:

Two-handle centerset lavatory faucet shall be of brass construction. Faucet shall feature brass valve bodies. Faucet shall feature quarter-turn washerless ceramic disc valves, assuring positive handle stop positioning. Product shall include 4” centers, 4” spout, standard or vandal-resistant Water-Guard aerator, and pop-up drain with lift rod and tailpiece. Base faucet shall be Kohler Model K-7401-_____-_____ with K-_____-_____-_____ handles **OR** complete faucet shall be Kohler Model K-7401-_____-CP.

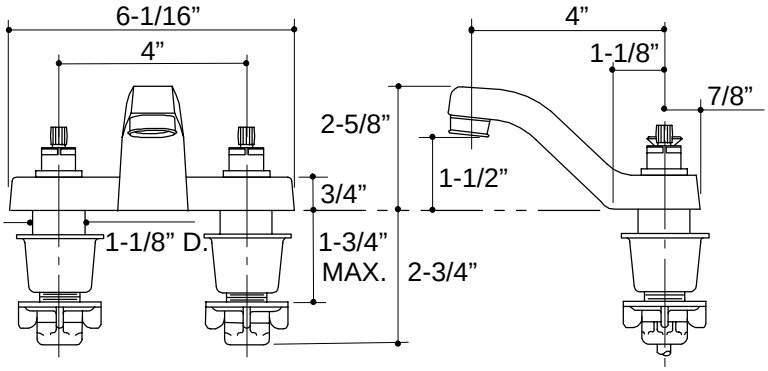

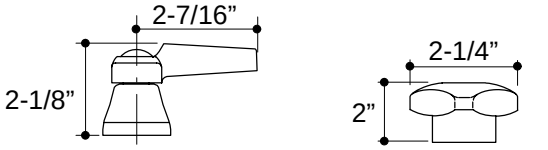

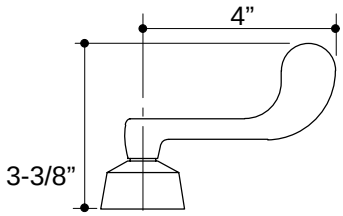

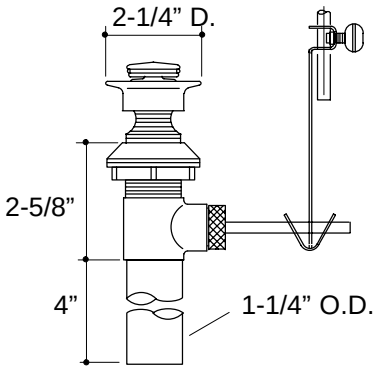

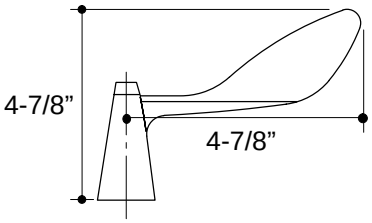

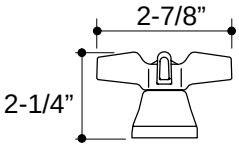

PRODUCT DIAGRAM

THE BOLD LOOK OF KOHLER®