KOHLER®

WELLWORTH™ TOILETS

K#	Bowl	Insulated	Tank Cover Locks	Tank
K-3422-**-AA	Elongated			4512
K-3422-T-**-AA	Elongated		X	4512
K-3422-U-**-AA	Elongated	X		4512
K-3422-UT-**-AA	Elongated	X	X	4512
K-3423-**-AA	Round			4512
K-3423-T-**-AA	Round		X	4512
K-3423-U-**-AA	Round	X		4512
K-3423-UT-**-AA	Round	X	X	4512

30419 Hardware Kit Consists of:
51624 (3 ea.), **32572** (3 ea.), **51533** (3ea.)

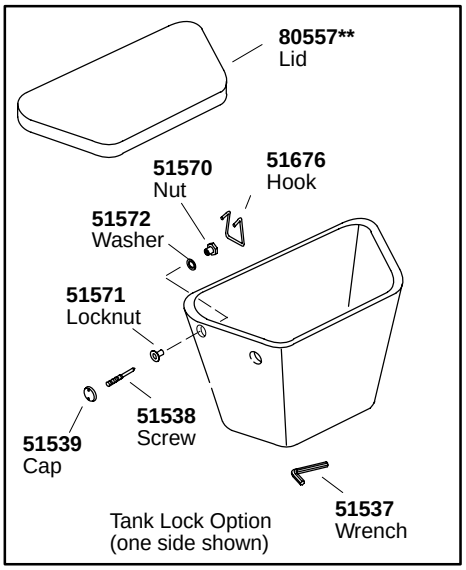

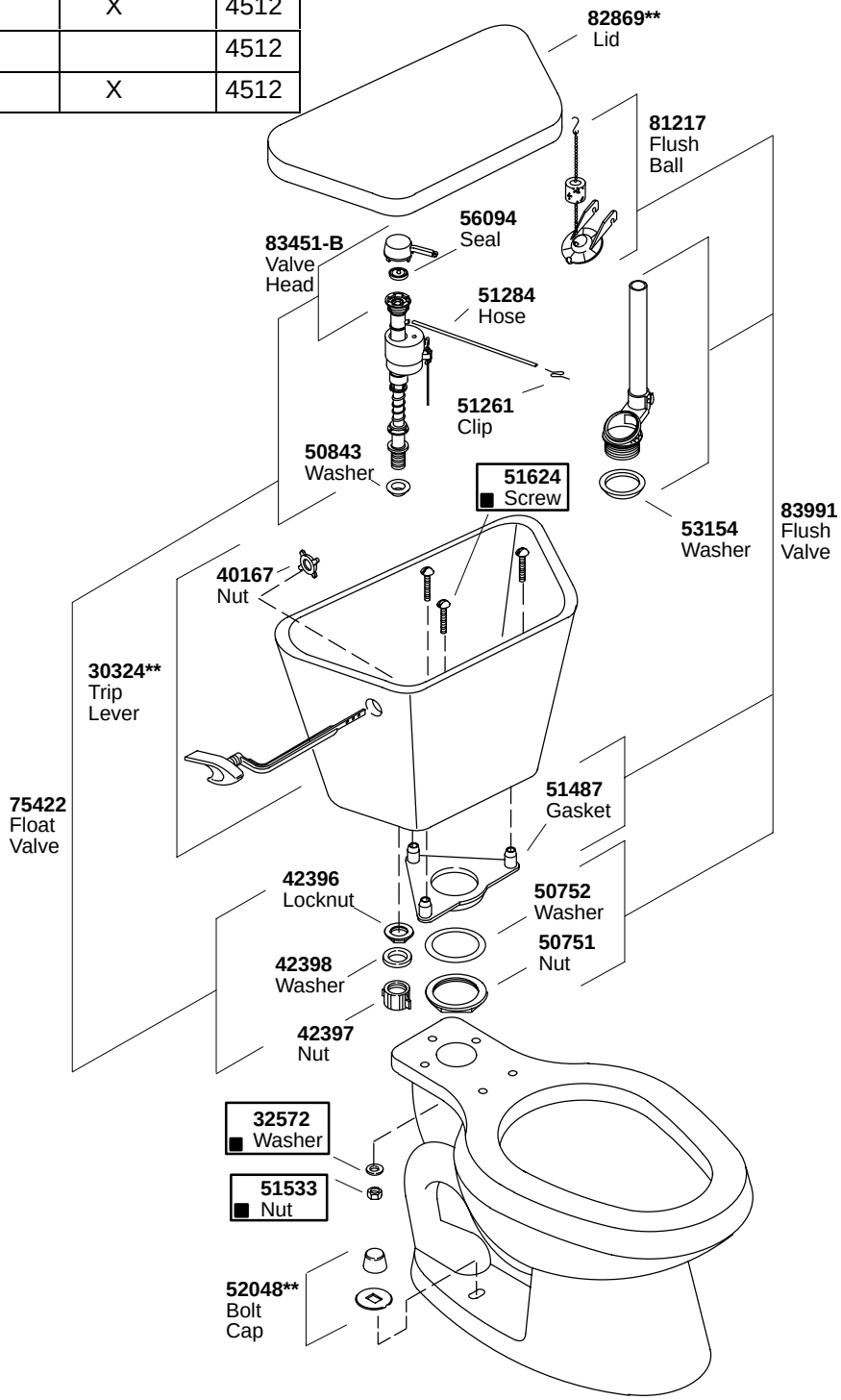

****Finish/color code must be specified when ordering.**