KOHLER® SERVICE PARTS

FLUME™ BATH & DECK-MOUNT SPOUTS

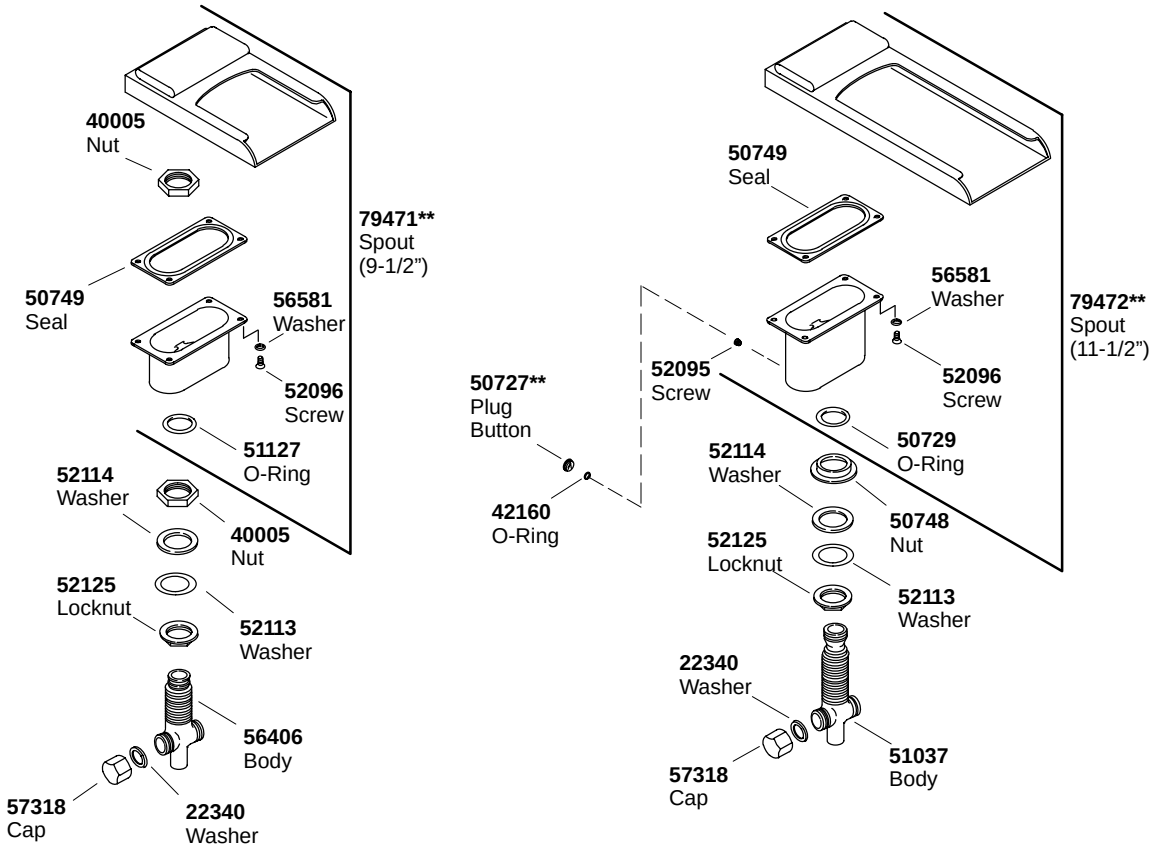

****Finish/color code must be specified when ordering.**