D SERIES

D953 / D954 / D955 / D956 / D984 / D985

INSTALLATION GUIDE

Included Items:
- Camera x 1
- Mounting Plate x 1
- Test Monitor BNC Lead x 1
- Instructions x 1
- Phillips Head Screws x 3

Required Items:
- Phillips Head Screwdriver

Optional Items:
- CE-REMOTE
- Drill w/ Phillips Head Bit

1. DISASSEMBLE

Remove the dome cover from the camera base by turning counter-clockwise.

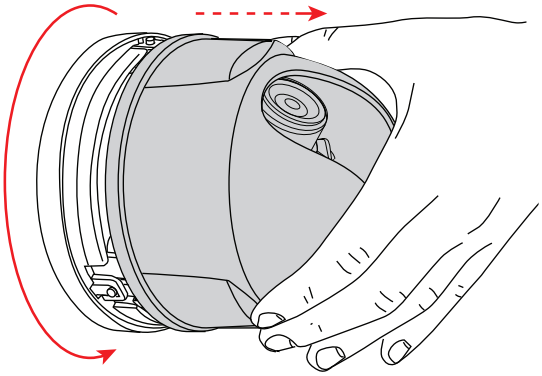

2. MOUNT PLATE

Affix the mounting bracket to the surface with the 3 supplied Phillips head screws.

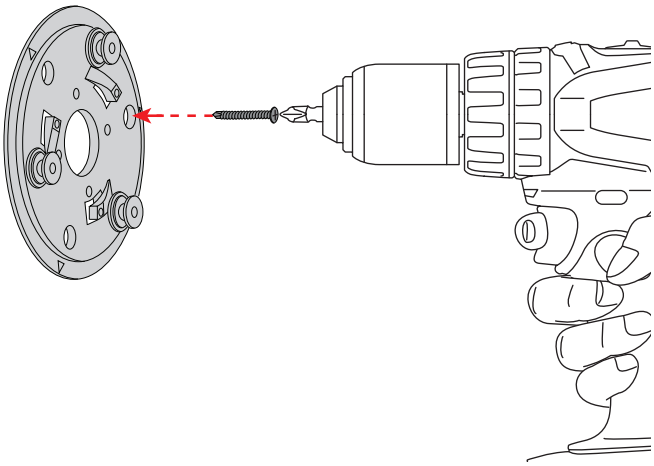

3. ATTACH CABLES

Feed the cable from the camera through the center of the mounting plate. Make connections to the BNC cable and the power connection. Feed any cable slack into the mounting surface.

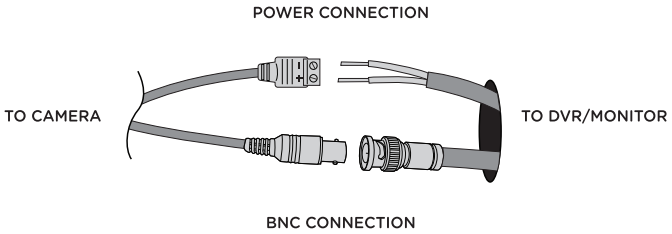

To ensure quality operation, verify proper BNC and power termination; along with proper voltage at camera.

4. MOUNT CAMERA

Place the camera body onto the plate. Align the metal pins on the plate with the holes on the camera body. Lock the camera in place by turning the camera body clockwise.

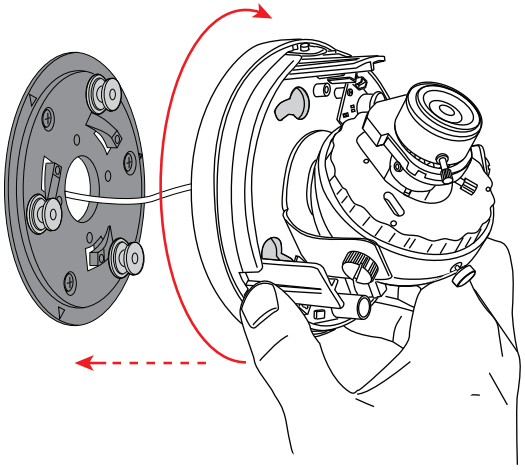

5. CAMERA ADJUSTMENT

a. Rotate the camera as necessary by turning the camera gimbal on the base.

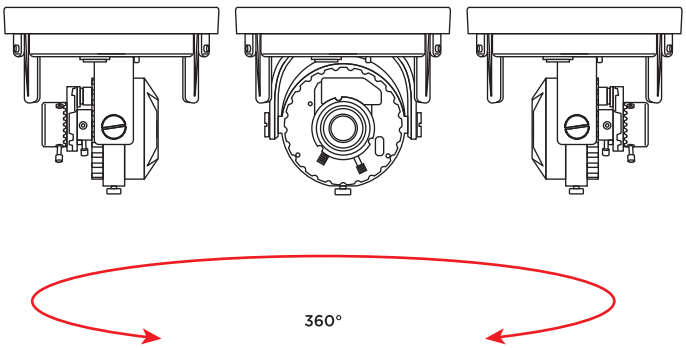

Take notice of the location of wires exiting the back of the camera body. If the wires have fallen below the circuit board there is potential for pinching of the wires between the board and the gimbal.

b. Loosen the thumb screws on the sides of the gimbal to adjust the camera lens angle.

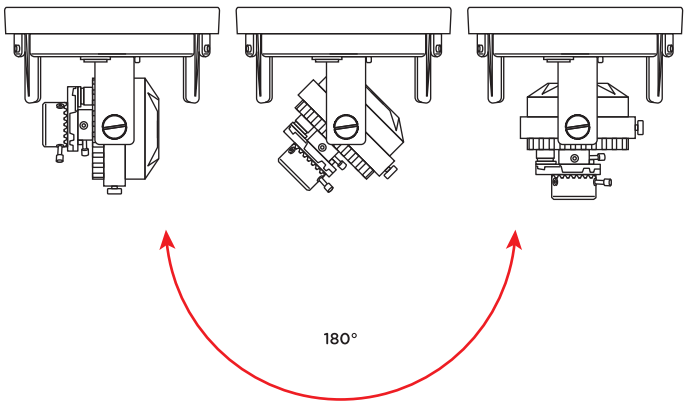

Tighten screws when done adusting.

clintonelectronics

Clinton Electronics
6701 Clinton Road
Loves Park, IL 61111

1.800.447.3306 Sales
1.800.549.6393 Support
1.815.633.8712 Fax

www.clintonelectronics.com

v.05.29.13

**Information in this document is subject to change*

5. CAMERA ADJUSTMENT

c. Rotate the barrel by loosening the thumb screw on the top of the camera, rotate to desired position.

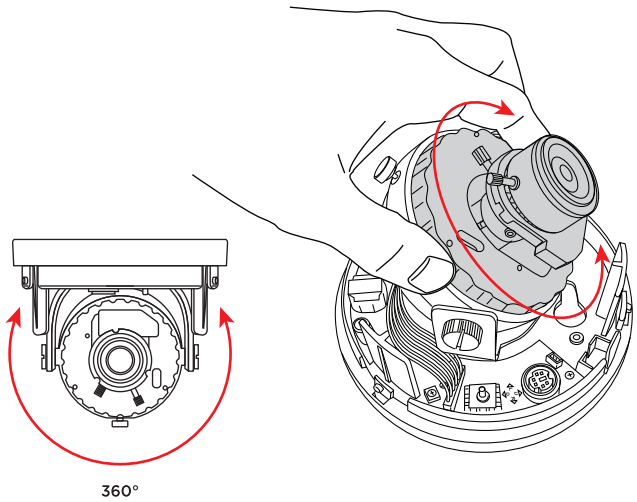

Tighten screws when done adusting.

6. REMOTE CONTROL

To test the camera with a test monitor use either the supplied test monitor BNC lead or optional *CE-REMOTE and plug into the appropriate connection.

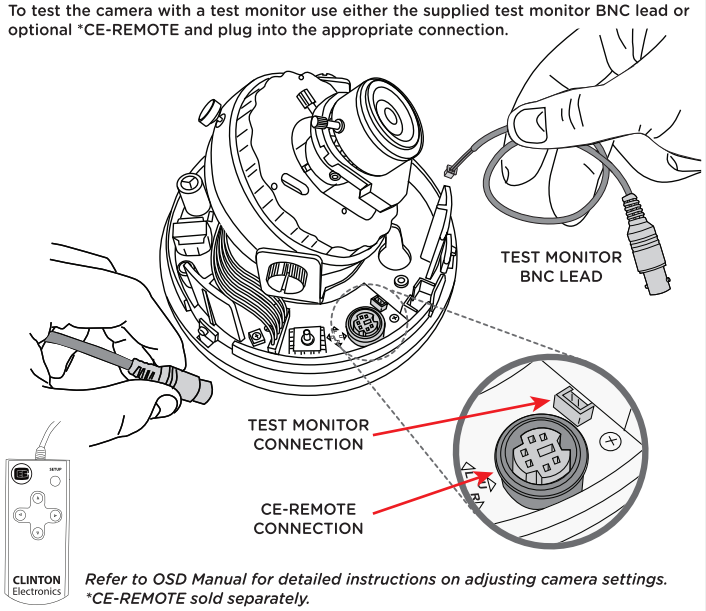

Refer to OSD Manual for detailed instructions on adjusting camera settings.
**CE-REMOTE sold separately.*

7. ZOOM/FOCUS ADJUSTMENT

Loosen the appropriate adjustment lever by turning counter-clockwise. To widen the viewing angle, rotate the Zoom lever to the Left. To narrow the viewing angle rotate the ZOOM lever to the Right. Rotate the Focus lever Left or Right to focus the lens.

With IR equipped cameras, it may be necessary to adjust the angle or rotation of the camera to access the zoom and focus adjustment levers.

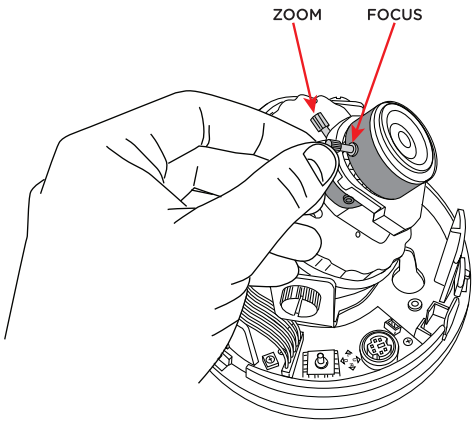

After adjustments have been made make sure to tighten the adjustment levers to lock the adjustments into place.

8. IR ADJUSTMENT

D984 / D985 only. To adjust the intensity of the IR LEDs, use a Phillips head screwdriver to turn the IR level adjustment potentiometer, (located next to the wire plug on the board). Turn the screw to the Left for brighter LEDs or to the Right for dimmer LEDs.

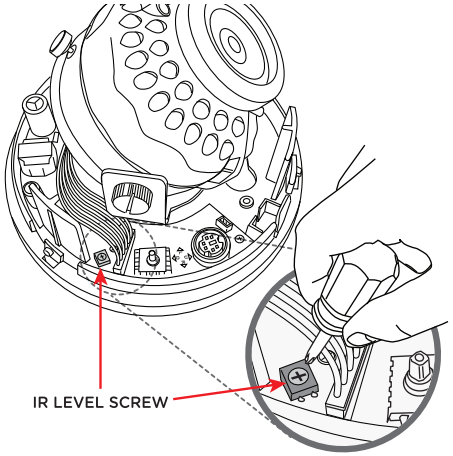

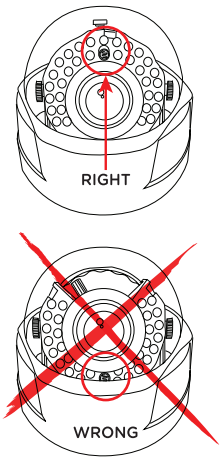

IR LED Placement

To avoid poor illumination and potential reflection, refer to the drawing (above right) to ensure that the IR LEDs are free from obstruction when dome cover is in place.

9. REASSEMBLE

a. Replace dome cover, turn clockwise to lock into place.

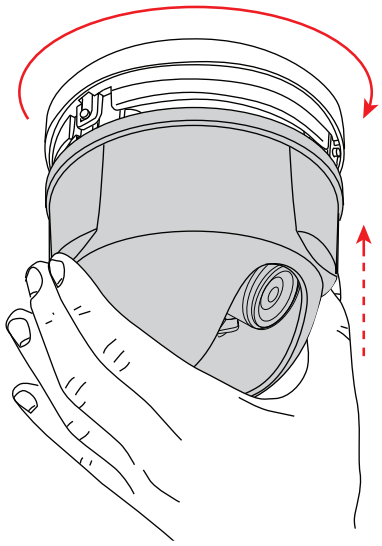

b. On non-IR equipped cameras, rotate the clear dome as necessary to align the viewing slot in the dome mask with the camera lens.

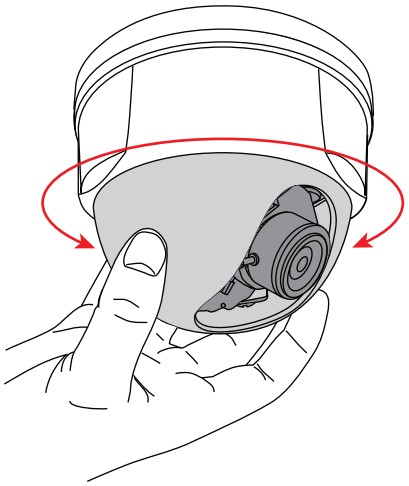

clintonelectronics

Clinton Electronics
6701 Clinton Road
Loves Park, IL 61111

1.800.447.3306 Sales
1.800.549.6393 Support
1.815.633.8712 Fax

www.clintonelectronics.com

v.05.29.13

**Information in this document is subject to change*