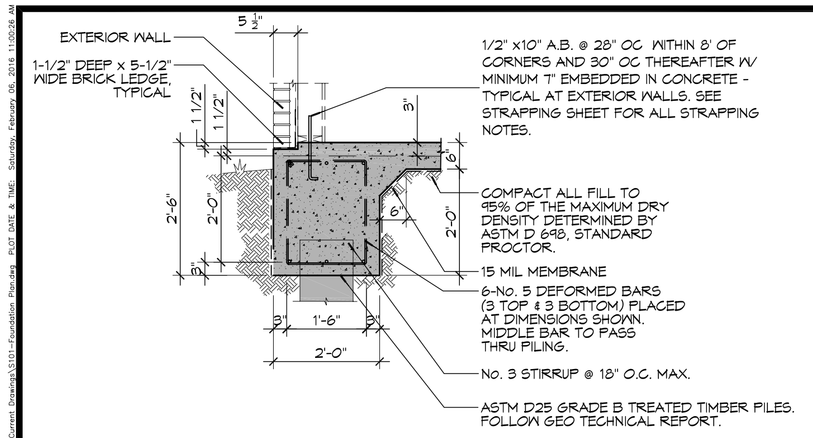

A S101 S101 **FOUNDATION SECTION**
SCALE: 1/2" = 1' - 0" EXTERIOR LOAD BEARING GRADE BEAM

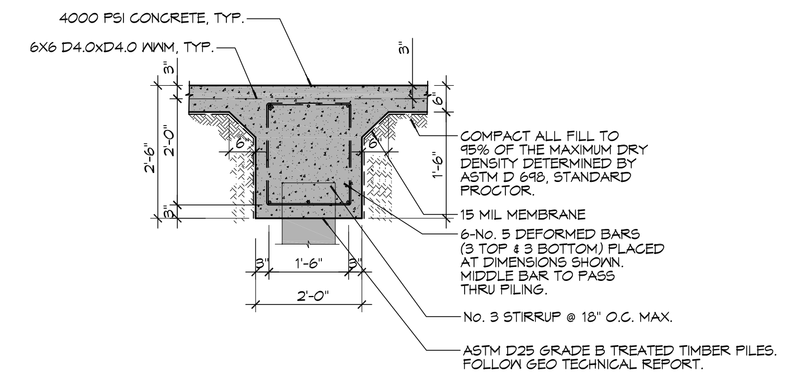

C S101 S101 **FOUNDATION SECTION**
SCALE: 1/2" = 1' - 0" INTERIOR LOAD BEARING GRADE BEAM

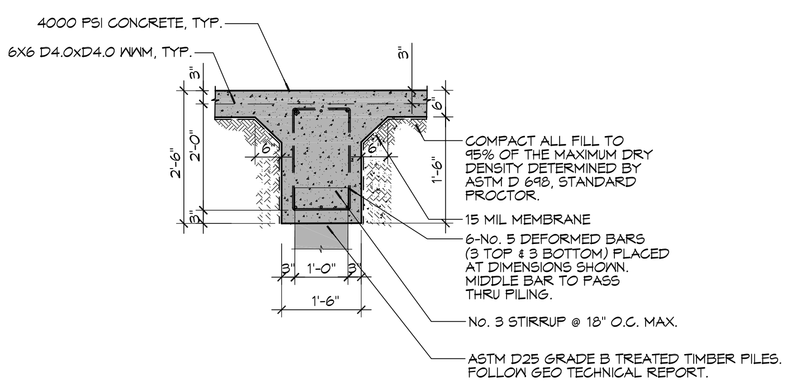

B S101 S101 **FOUNDATION SECTION**
SCALE: 1/2" = 1' - 0" INTERIOR GRADE BEAM

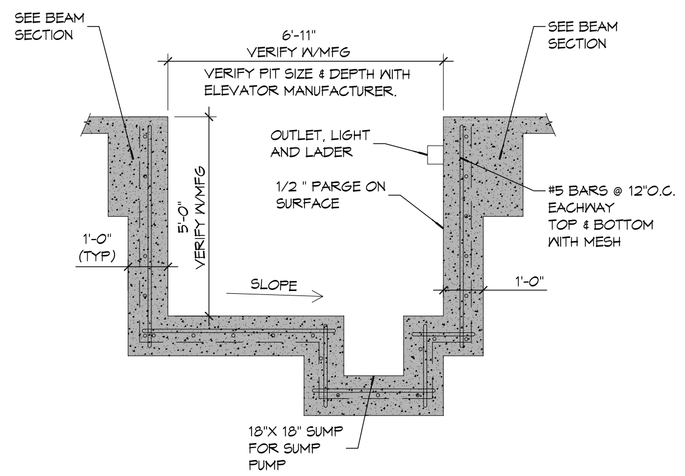

D S101 S101 **FOUNDATION SECTION**
SCALE: 1/2" = 1' - 0" ELEVATOR PIT

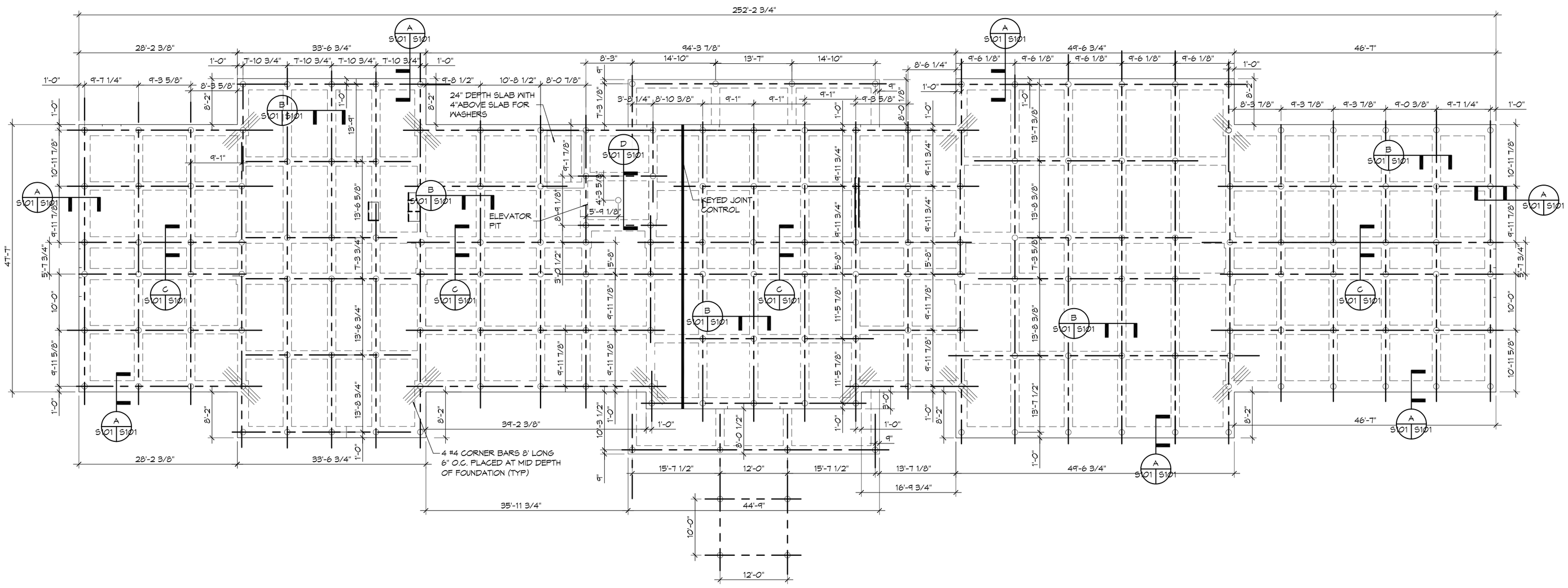

N **1 FOUNDATION & PILING PLAN**
SCALE: 3/32" = 1'-0" FOUNDATION AND PILING PLAN

PILING NOTES

1. TIBER PILE QUALITY, INSTALLATION, INSTALLATION MONITORING, AND PILE TESTING PROGRAM SHALL BE IN STRICT ACCORDANCE WITH THE INSTRUCTIONS OUTLINED IN ADDENDUM 1 DATED SEPTEMBER 18, 2015 TO GEOTECHNICAL ENGINEERING REPORT BY DANIEL J. HOLDER, PE, INC DJH FILE NO.15-062, DATED AUGUST 22, 2015.
2. PILES ARE TO BE ASTM D25 GRADE B TIMBER PILES, TREATED.
3. NO FIELD SUPERVISION OR INSPECTION PROVIDED UNDER THIS SEAL UNLESS OTHERWISE NOTED.
4. PILE LAYOUT MAY BE MODIFIED DUE TO ACTUAL DRIVING CONDITIONS. ENGINEER TO BE NOTIFIED ON ANY MODIFICATION.
5. A PILE BLOW COUNT LOG OF ALL PILES IS TO BE SUBMITTED TO THE ENGINEER OF RECORD. FAILURE TO SUBMIT SAID LOG WILL RELEASE THE ENGINEER OF ALL RESPONSIBILITY.
6. CONTRACTOR IS RESPONSIBLE FOR THE COMPARISON & VERIFICATION OF PILE LAYOUT DIMENSIONS WITH MOST RECENT ARCHITECTURAL DRAWINGS, ASSURING THAT PILES DO FALL WITHIN LIMITS OF THE DESIGN.
7. FILL, AS A MINIMUM QUALITY, SHALL BE 40% CLAY AND 60% SANDY MIXTURE, PLACED IN 6" LIFTS AND COMPACTED TO A MINIMUM OF 95% STANDARD PROCTOR. ALL SLAB ON GRADES SHALL BE UNDERLAIN BY A MINIMUM 6" LAYER NO. 57 LIMSTONE. FOOTINGS ARE DESIGNED TO USE SOIL WITH A BEARING PRESSURE OF 1600 PSF. FOR CONTINUOUS FOOTINGS.

GENERAL FOUNDATI ON NOTES

1. ALL DIMENSIONS ARE EDGE OF CONCRETE (EOC) TO EDGE OF CONCRETE (EOC) UNLESS NOTED OTHERWISE.
2. VERIFY ALL PLUMBING ROUGH-IN LOCATIONS ON ARCHITECTURAL DWGS.
3. CONCRETE MIX SHALL HAVE A MINIMUM COMPRESSIVE STRENGTH OF 4000 PSI AT 28 DAYS. CONCRETE MIX SHALL BE IN ACCORDANCE WITH ACI-318.
4. ALL CONVENTIONAL REINFORCING STEEL SHALL MEET ASTM-A615 (GRADE 60).
5. ONE LAYER OF POLYETHYLENE VAPOR BARRIER SHALL BE PLACED UNDER ALL CONCRETE. VAPOR RETARDER TO BE MINIMUM 15 MIL, THICKNESS; ASTM E 1745 CLASS A, PERMEANCE LESS THAN 0.01 PERMS, EQUAL TO STEGO INDUSTRIES STEGO WRAP, ECOSHIELD-E 15 MIL BY EPRO, OR IRONBAR 15 BY FLATIRON FILMS. PROVIDE APPROPRIATE ACCESSORIES FOR A COMPLETE SYSTEM.
6. ALL REINFORCING STEEL AND MESH SHALL BE SECURELY SUPPORTED TO PREVENT BOTH VERTICAL AND HORIZONTAL MOVEMENT DURING CONCRETE PLACEMENT.
7. THE CONTRACTOR SHALL VERIFY ALL DROPS, OFFSETS, BRICK LEDGES, DIMENSIONS AND CONFIGURATIONS. CONTRACTOR MUST BE RESPONSIBLE FOR SAME.
8. GRADE BEAM DIMENSIONS MAY VARY BY -5%, +20%.
9. ALL SOIL BELOW SLAB SHALL RECEIVE TERMITE TREATMENT.

www.dammonengineering.com
info@dammonengineering.com
PH: 985.649.5832 F: 985.641.5950

Chief Engineer: Brian Mistich, PE
1456 Oliver Street
Slidell, LA 70458

#	DESCRIPTION	DATE

REVISIONS

SEAL:

PRELIMINARY NOT FOR CONSTRUCTION

MAINSTAY SUITES
700 MAIN STREET
LOT #1 LA HWY 27
HACKBERRY, LA 70645

JOB No: 2265 | DATE: FEBRUARY, 2016
DRAWN BY: JTL | CHECKED BY: CACD

THE INFORMATION, DESIGNS AND DRAWINGS PRESENTED HEREIN ARE THE EXCLUSIVE PROPERTY OF DAMMON ENGINEERING, INC. AND MAY NOT BE REPRODUCED OR USED FOR ANY OTHER PROJECT WITHOUT WRITTEN CONSENT OF DAMMON ENGINEERING, INC. ©2016 DAMMON ENGINEERING, INC. ALL RIGHTS RESERVED.

SHEET TITLE:
FOUNDATION PLAN

DRAWING NUMBER:
S101

SHEET No: 10 of -