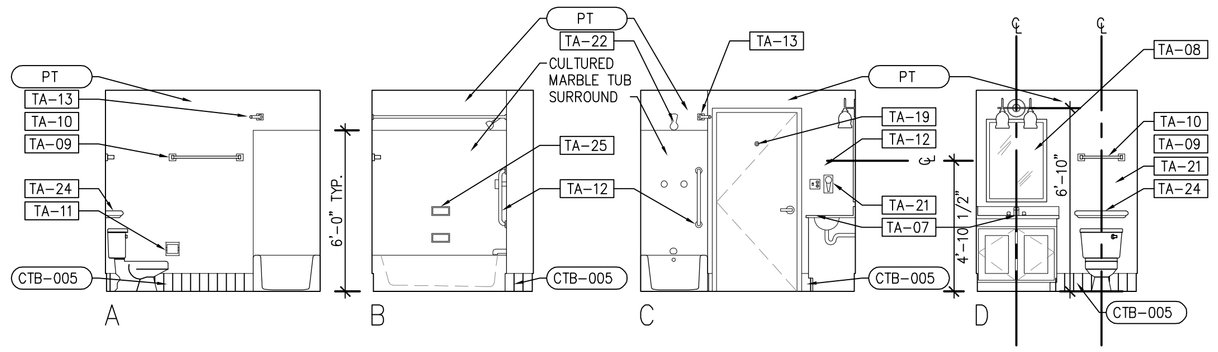

6 INTERIOR ELEVATIONS
SCALE: 1/4"=1'-0"

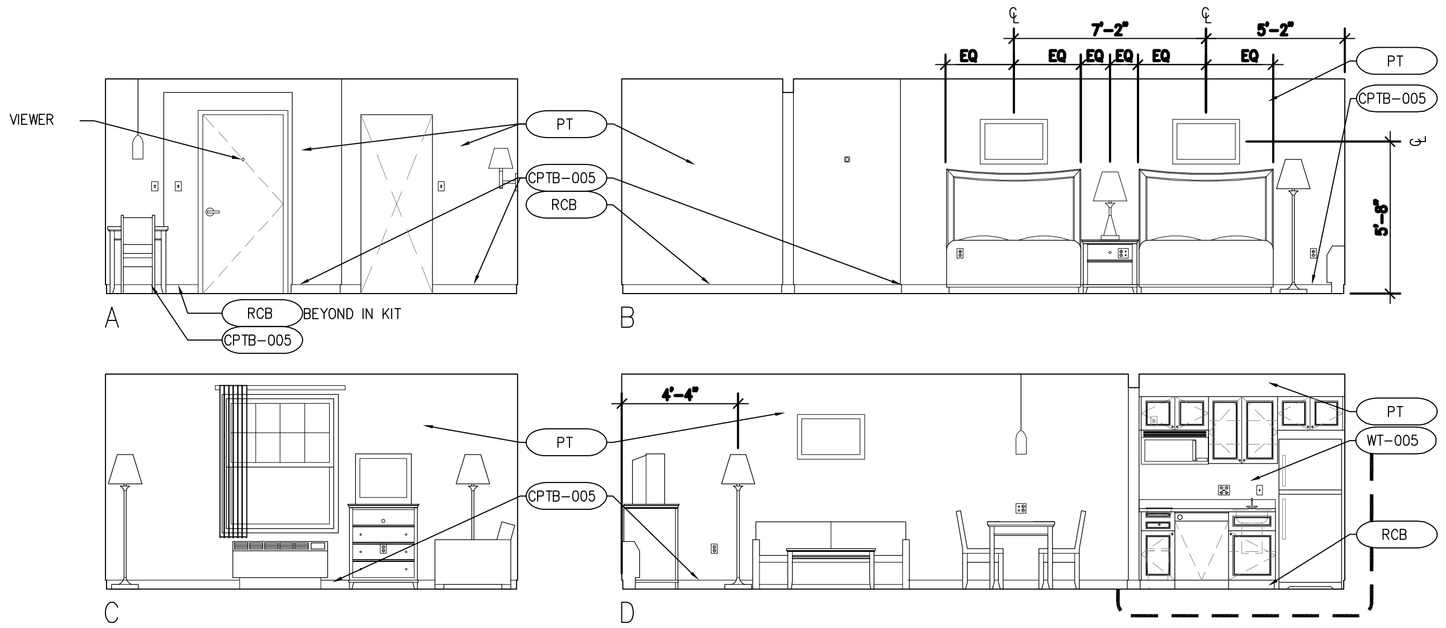

5 INTERIOR ELEVATIONS
SCALE: 1/4"=1'-0"

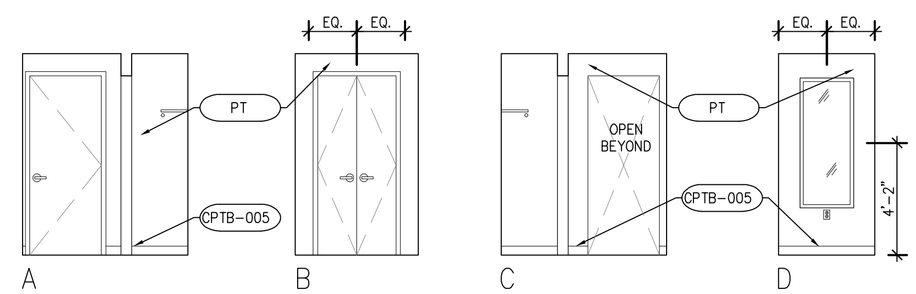

7 INTERIOR ELEVATIONS
SCALE: 1/4"=1'-0"

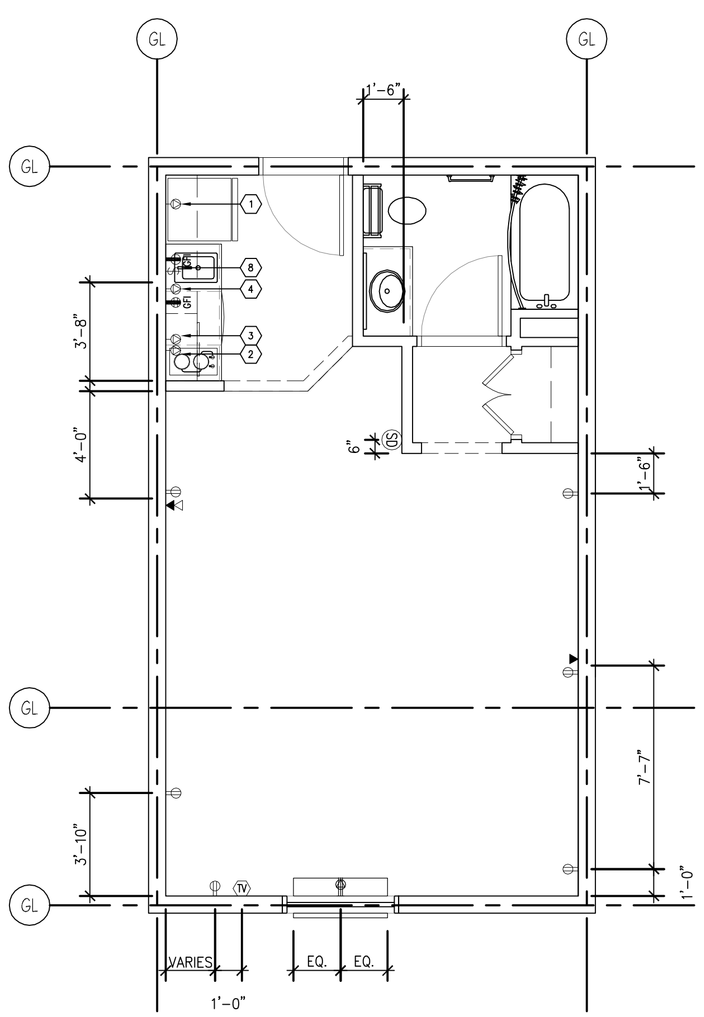

4 ELECTRICAL PLAN
SCALE: 1/4"=1'-0"

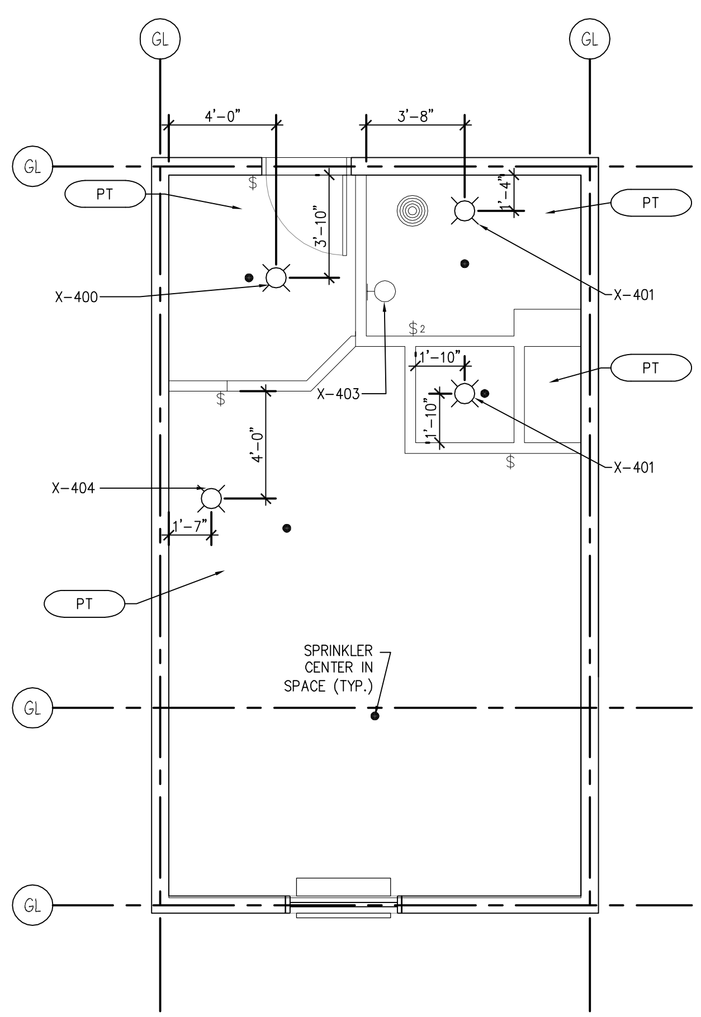

3 REFLECTED CEILING PLAN
SCALE: 1/4"=1'-0"

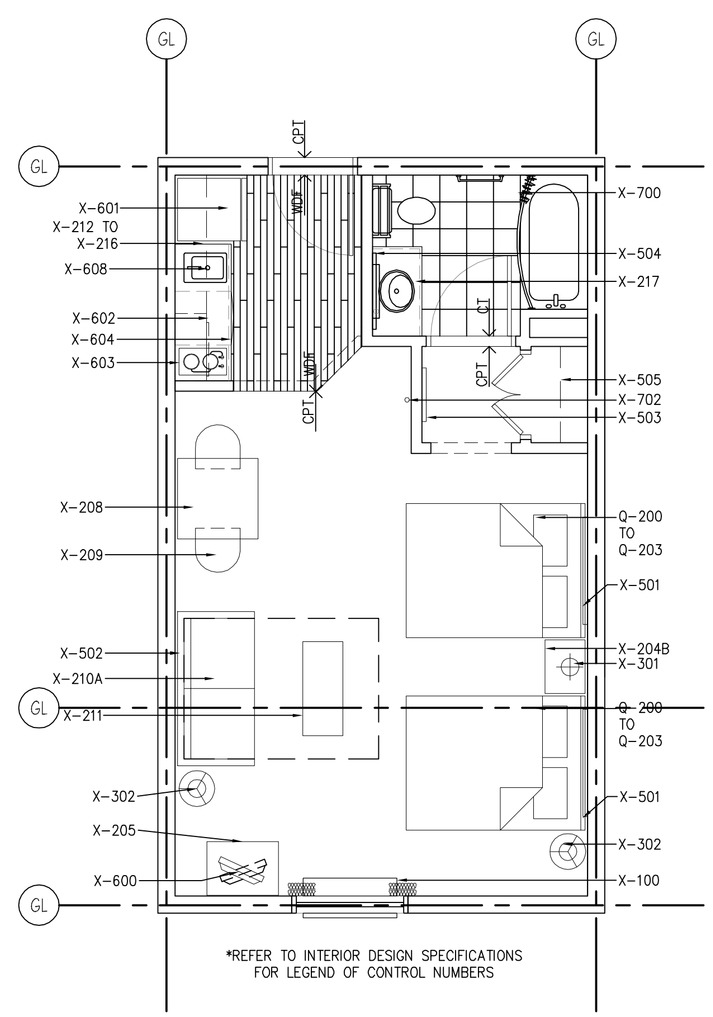

2 FLOOR FINISH/FFE PLAN
SCALE: 1/4"=1'-0"

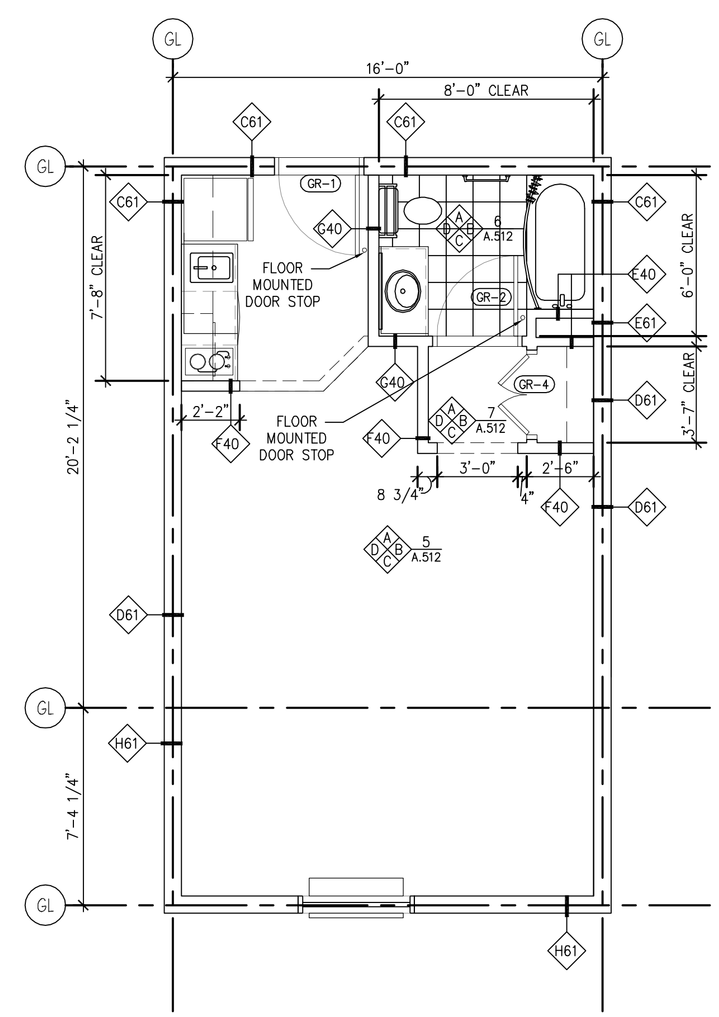

1 ARCHITECTURAL FLOOR PLAN
SCALE: 1/4"=1'-0"

GUESTROOM GENERAL NOTES

1. REFER TO 1/8" FLOOR PLANS FOR OVERALL GUESTROOM AND WINDOW DIMENSIONS, UNO.
2. GRID LINES ARE LOCATED AT THE CENTERLINE OF STUDS.
3. OVERALL ROOM DIMENSIONS ARE FROM CENTERLINE OF STUD TO CENTERLINE OF STUD. INTERIOR DIMENSIONS ARE FROM FACE OF FINISH TO FACE OF FINISH, UNO.
4. FOR DETAILED ELEVATIONS & SECTIONS OF KITCHEN CABINETS, BATHROOM CABINET, & DRESSING ROOM CLOSET SYSTEM, REFER TO SHEET A.702, A.703.
5. PLUMBING CHASE SHALL HAVE A FIRESTOP AT EACH FLOOR.
6. MAINTAIN, BY CODE, MINIMUM REQUIRED SEPARATION BETWEEN GUESTROOMS AT PLUMBING CHASE WALLS.

GUESTROOM CEILING NOTES

1. TYPICAL CEILING FINISH HEIGHT SHALL BE 8'-0" CLEAR AFF(FLOORS 1 THROUGH 3), UNO. 9'-0" FOURTH FLOOR HEIGHT.
2. TYPICAL CEILING FINISH HEIGHT FOR BATHROOMS AND DRESSING ROOMS SHALL BE 7'-6" CLEAR AFF, UNO.
3. TYPICAL CEILING FINISH FOR BEDROOMS, LIVING ROOMS, AND DRESSING ROOMS SHALL BE TEXTURED PAINTED GYP BD, UNO.
4. TYPICAL CEILING FINISH FOR BATHROOMS AND KITCHENS SHALL BE SMOOTH PAINTED GYP BD, UNO.
5. SOFFITS SHALL BE SMOOTH PAINTED FINISH ON GYP BD.
6. CENTER SINGLE SURFACE MOUNTED LIGHT FIXTURES IN CEILING, UNO.
7. CENTER SPRINKLER HEADS IN SPACES.

AREA	WALLS	TRIMS	DOORS	FLOORS	COMMENT	BASE	CEILING	OTHER
GUESTROOM	VYL-005	PT-005	PT-005	CPT-005	USE CPAD-005	CPTB-005		
KITCHEN	VYL-005			WDF-005		RCB-005		
BATHROOM	VYL-006	PT-005	PT-005	CT-005		CTB-005		

GENERAL FINISH NOTE: REFER TO RCP FOR CEILING FINISH. REFER TO FF&E PLAN FOR FLOOR FINISH. REFER TO INTERIOR ELEVATIONS FOR WALL FINISH.

LIGHT & POWER SYMBOLS LEGEND

	CEILING MOUNTED LIGHT FIXTURE
	PENDANT LIGHT FIXTURE
	FLOOR LAMP
	DESK/TABLE LAMP
SD	SMOKE DETECTOR
DB	DOOR BELL w/ LIGHT (HEARING IMPAIRED ROOMS)
TV	CABLE TV CONNECTION
	TELEPHONE CONNECTION
	COMPUTER/DATA OUTLET
T	THERMOSTAT
	EXHAUST FAN
	DUPLEX RECEPTACLE
	QUADPLEX RECEPTACLE
	G.F.I. RECEPTACLE
	SPECIAL RECEPTACLE
	PTAC RECEPTACLE
	DUPLEX RECEPTACLE & TELEPHONE OUTLET W/ COMMON PLATE
	DUPLEX RECEPTACLE, TEL/COMP DATA OUTLET WITH COMMON PLATE
$	GFI RECEPTACLE/SINGLE POLE SWITCH WITH COMMON PLATE
$	SINGLE POLE SWITCH
$2	DOUBLE POLE SWITCH
$3	THREE WAY SWITCH
$4	FOUR WAY SWITCH
$OC	WALL MOUNTED OCCUPANCY SENSOR W/ SWITCH

TOILET & BATH ACCESSORY SCHEDULE

ITEM#	DESCRIPTION	LOC.
TA-05	TOILET	PRR, GR, ADA GR
TA-06	CONTINUOUS TOILET GRAB BAR (SURFACE MOUNTED)	GR & ADA GR
TA-07	SINK / CASEWORK (MOUNTING HEIGHT)	GR & ADA GR
TA-08	MIRROR, SURFACE MOUNTED (BOTTOM @ 40" AFF)	GR & ADA GR
TA-09	TOWEL BAR (24"L @ 54" AFF 24" @ 42") SURFACE MOUNTED	GR & ADA GR
TA-10	TOWEL BAR (16"L @ 54" AFF) SURFACE MOUNTED	GR & ADA GR
TA-11	TOILET TISSUE DISPENSER (SINGLE ROLL / RECESSED)	PRR, GR & ADA GR
TA-12	TUB GRAB BAR, SURFACE MOUNTED (NON-HANDICAPPED)	GR
TA-13	CURVED SHOWER CURTAIN ROD, SURFACE MOUNTED, (MOUNTING HEIGHT = SEE SCHEDULE)	GR & ADA GR
TA-14	FOLDING SHOWER SEAT, SURFACE MOUNTED	ADA GR
TA-15	12" TUB GRAB BAR (HEAD END, SURFACE MTD)	ADA GR
TA-16	24" TUB GRAB BAR, 2 REQ'D (SIDE WALL, SURFACE MTD.)	ADA GR
TA-17	24" TUB GRAB BAR (DRAIN END, SURFACE MTD)	ADA GR
TA-18	SHOWER GRAB BARS SURFACE MOUNTED	ADA GR
TA-19	ROBE/COAT HOOK	GR
TA-20	ROBE/COAT HOOK 48"	ADA GR
TA-21	HAIR DRYER	GR & ADA GR
TA-22	SHWR HEAD & CONTROLS (MOUNTING HEIGHT = SEE SCHED)	GR
TA-23	SHWR HEAD & CONTROLS (MOUNTING HEIGHT = SEE SCHED)	ADA GR
TA-24	CULTURED SHELF 24"	GR
TA-25	SOAP DISH 42"	GR & ACC GR

TOILET/BATH ACCESSORY NOTES:

1. PRR = PUBLIC RESTROOM
   GR = GUESTROOM
   ADA GR = ACCESSIBLE GUESTROOM

DAMMON ENGINEERING, INC.
LOUISIANA & MISSISSIPPI
www.dammonengineering.com
info@dammonengineering.com
PH: 985.649.5832 F: 985.641.5950
Chief Engineer: Brian Mistich, PE
554 Old Spanish Trail
Slidell, LA 70458

REVISIONS

#	DESCRIPTION	DATE

SEAL:

STATE OF LOUISIANA
BRIAN A. MISTICH
License No. 30187
05-27-16
PROFESSIONAL ENGINEER

MAINSTAY SUITES
700 MAIN STREET
HOT FLAT HWY 2
HACKBERRY, LA 70645

JOB No: 2285 | DATE: APRIL 2016
DRAWN BY: JTL | CHECKED BY: JMS

This drawing and specifications, designs and arrangements represented thereby are and shall remain the property of Dammon Engineering, and no copies shall be made by any person other than Dammon Engineering, and shall not be loaned, copied or exhibited in any manner without the written permission of Dammon Engineering. These plans or data shall not be used for any purpose other than those pertaining to architecture and construction by Dammon Engineering. Visual contact with these drawings or specifications shall constitute conclusive evidence of acceptance of these restrictions.

SHEET TITLE:
DOUBLE QUEEN SUITE DETAILS

DRAWING NUMBER:
A309

SHEET No: 33 of 52