KOHLER®
Roughing-In

K-3224
RAVINIA™
STAINLESS STEEL SINK

Ordering Information

Applicable product:		
Four-hole sink	K-3224-4	shown
Three-hole sink	K-3224-3	not shown
Two-hole sink	K-3224-2	not shown
Accessories/hardware:		
Hardwood cutting board	K-3278	optional
Wire rinse basket/dishrack	K-3280	optional
Colander	K-3291	optional

Product Information

Fixture*:		basin area	water depth
Sink, left		356 x 457mm	184mm
Sink, right		356 x 381mm	184mm
Outlet	∅92mm		
Faucet holes	∅37mm		
* Approximate measurements for comparison only.			

Included Components:	
Fastener pack	90208

Installation Notes

Refer to installation instructions included with fixture before beginning installation.

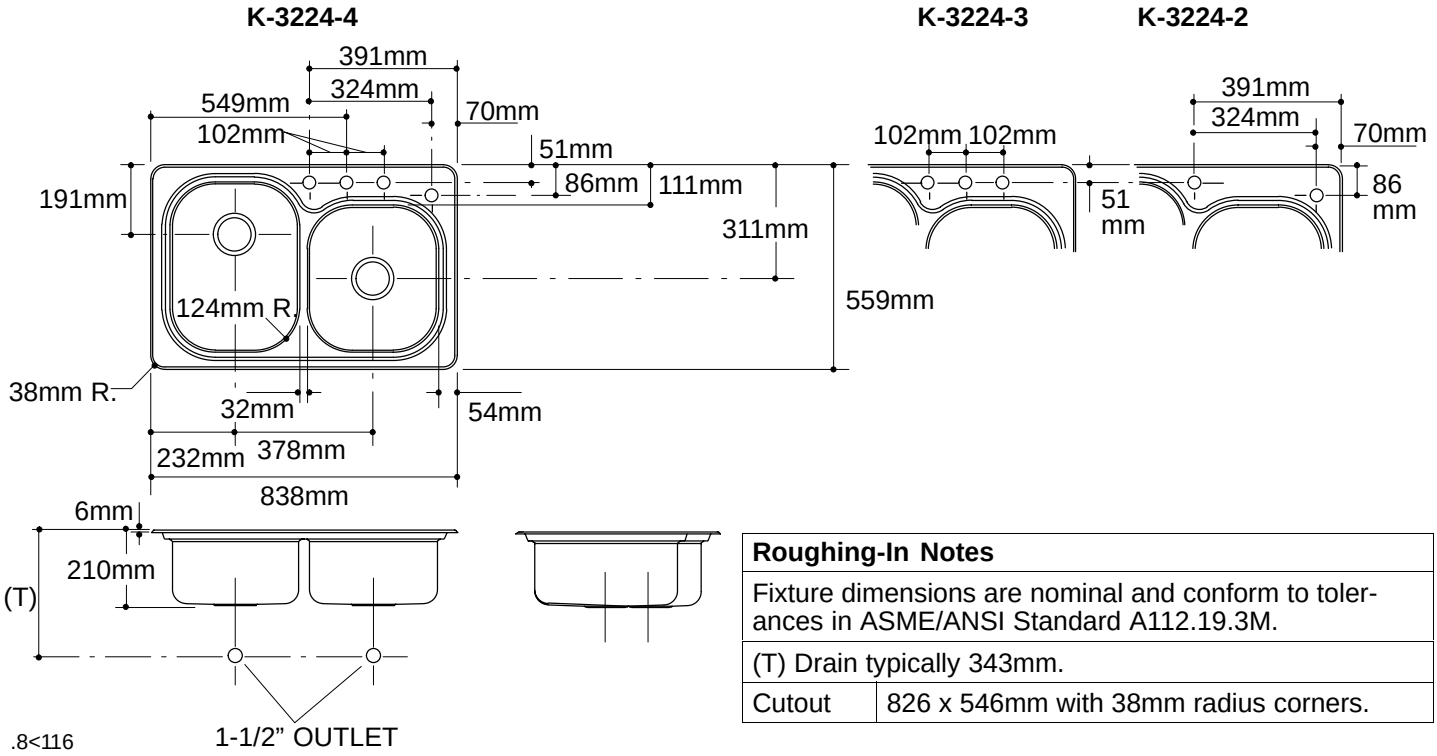

Roughing-In Notes	
Fixture dimensions are nominal and conform to tolerances in ASME/ANSI Standard A112.19.3M.	
(T) Drain typically 343mm.	
Cutout	826 x 546mm with 38mm radius corners.