K-6972-2, K-6973-2 ALTERNA™ KITCHEN SINK FAUCET

Ordering Information

Applicable faucet:	
Square handles and black handspray	K-6972-2
Square handles and white handspray	K-6973-2

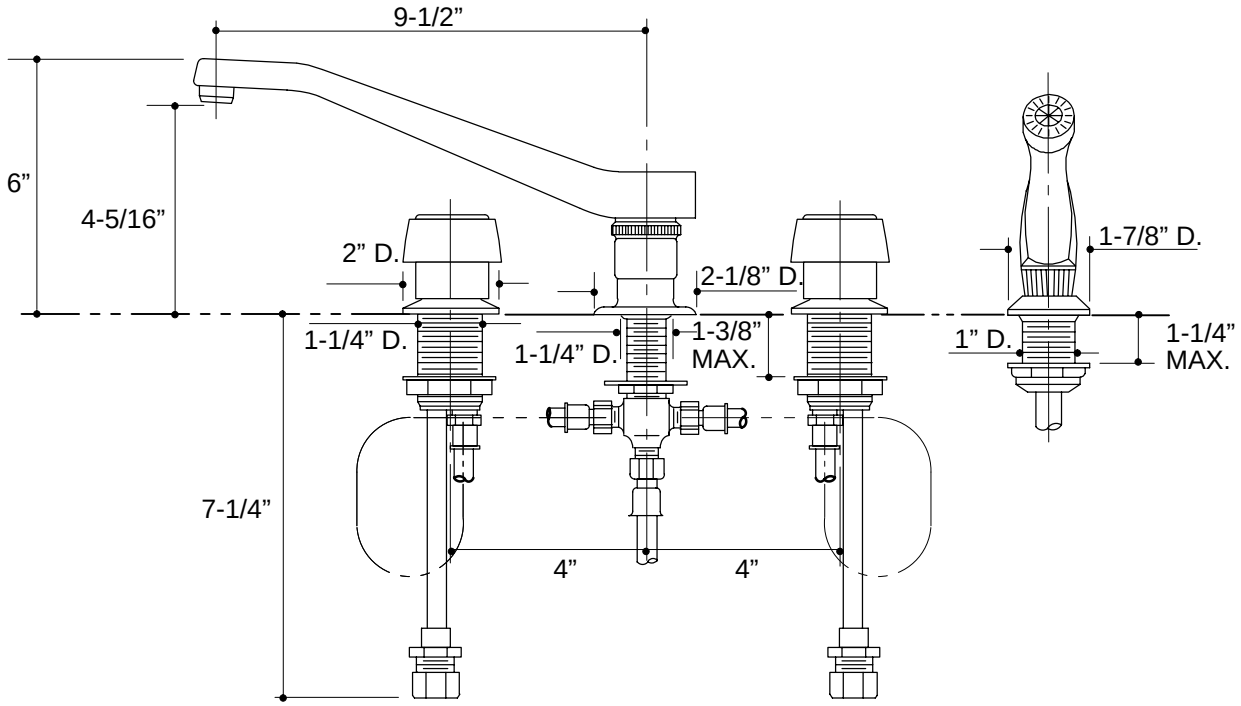

NOTES: