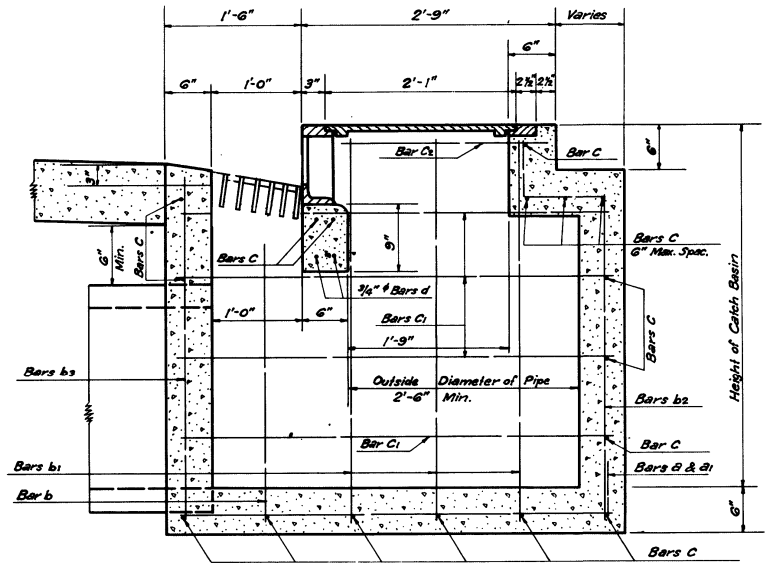

SECTION C-C
WELDED AND SEALED GRATE
(FOR RIVETED RETICULINE GRATE ALTERNATE, SEE SHEET 2)

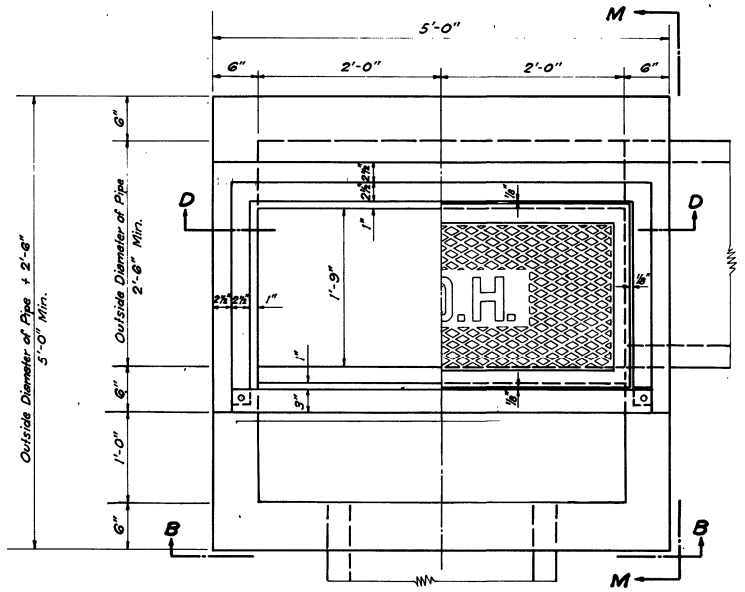

HALF PLAN
Showing Cast Iron Frame

HALF PLAN
Showing Cast Iron Cover

Grate Not Shown

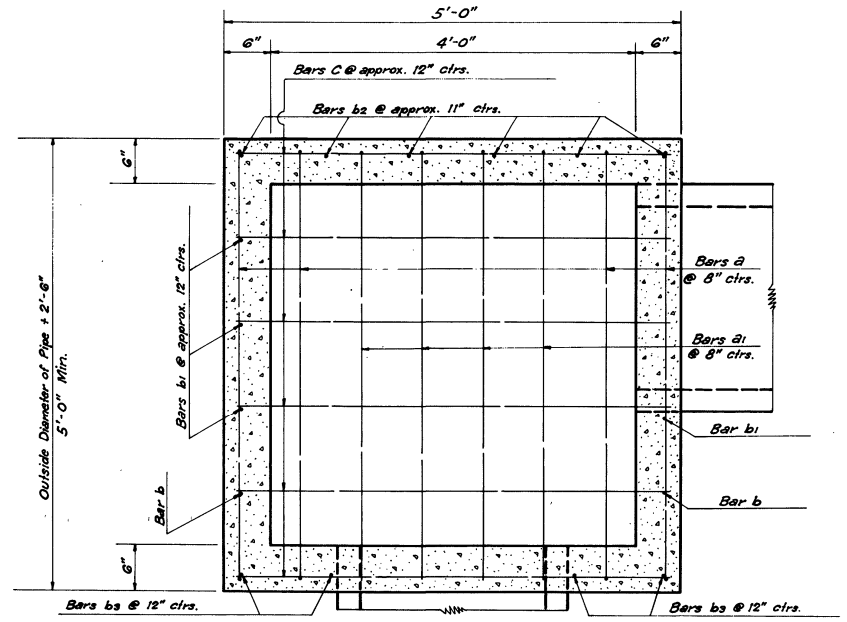

SECTION A-A

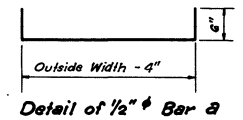

Detail of ½" ϕ Bar a

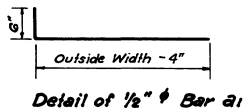

Detail of ½" ϕ Bar a1

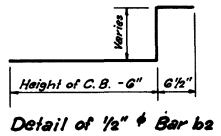

Detail of ½" ϕ Bar b2

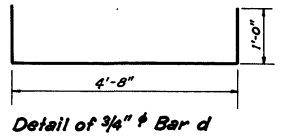

Detail of ¾" ϕ Bar d

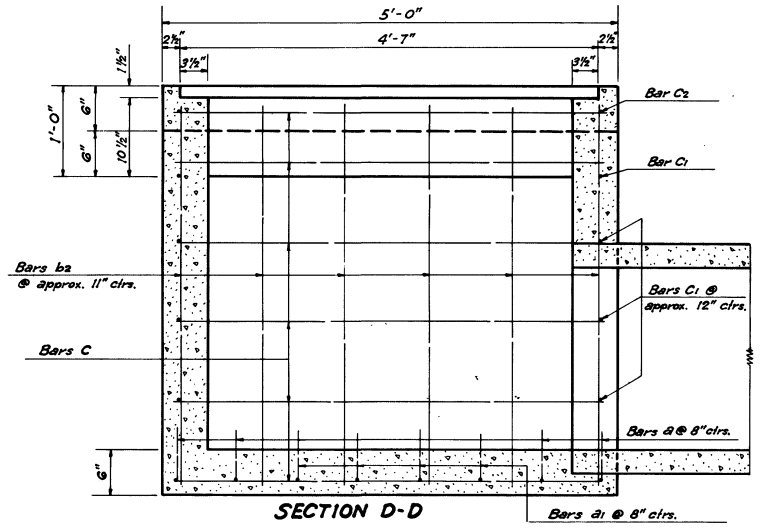

SECTION D-D

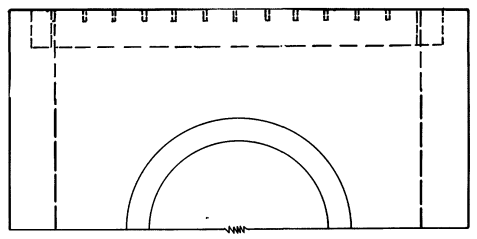

PART ELEVATION B-B
Showing Gutter Grate
WELDED AND SEALED GRATE
(FOR RIVETED RETICULINE GRATE ALTERNATE, SEE SHEET 2)

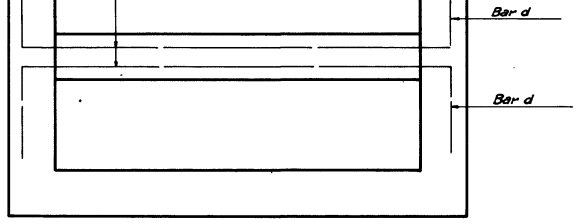

PART PLAN
Showing Reinforcing in Structure

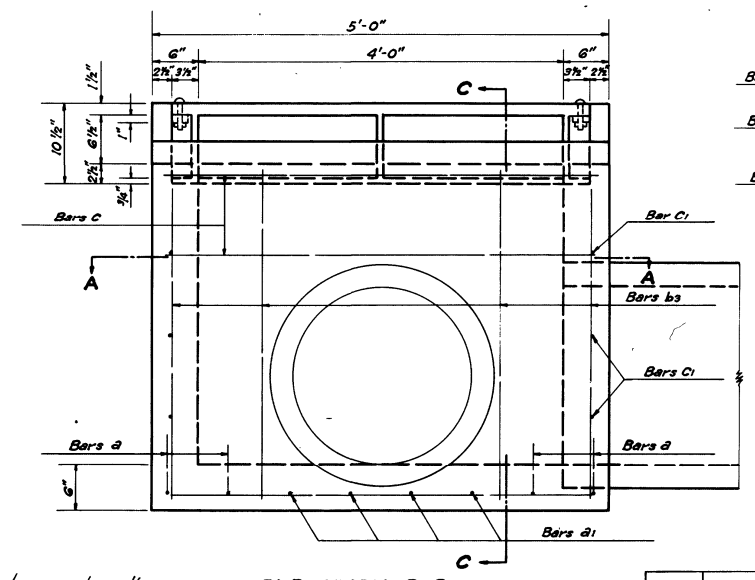

ELEVATION B-B
Gutter Grate not shown

Note:
The Contractor will not pour above the bottom of the Slab until the paving adjacent to the Basin is completed.

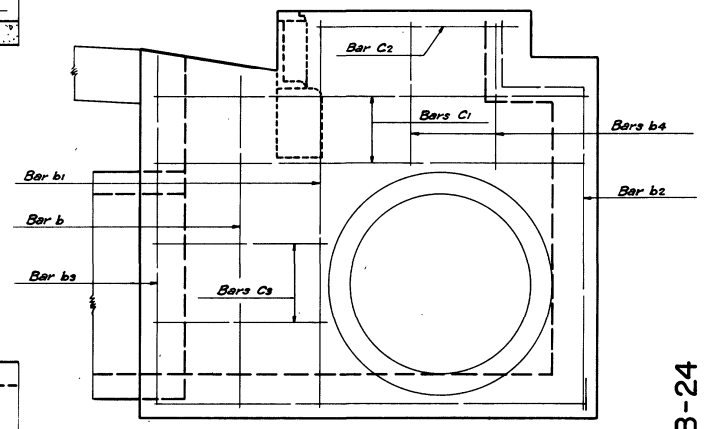

ELEVATION M-M

Note: All Bars to be #4, unless indicated otherwise.

R-CB-24

DATE	DESCRIPTION	BY
4-6-76	Note on Pouring Sequence	
7-20-78	Added Note for Bar Size	W.E.M.
6-10-81	Revised Gutter Grate	W.E.M.

REVISIONS

STANDARD PLAN
R.C. CATCH BASIN
CURB AND GUTTER GRATE
8" CURB EXPOSURE
(CONSTRUCTED OUTSIDE OF PAVEMENT)

DATED Oct. 1992

STATE OF LOUISIANA
DEPARTMENT OF HIGHWAYS

DESIGNED	DETAILED Q. A. H.	TRACED A.W.
CHECKED	CHECKED W. E. M.	CHECKED W.E.M.
IN CHARGE OF		

R-CB-24
SHEET 1 OF 2 SHEETS