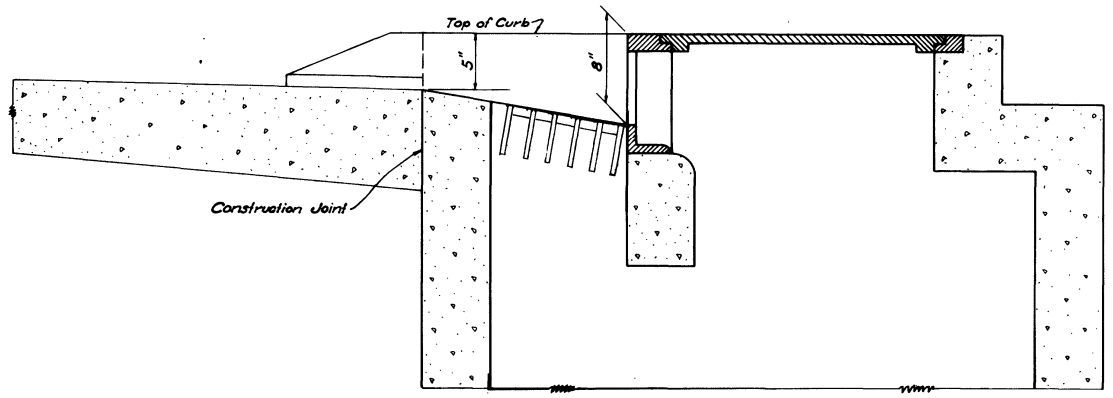

PART SECTION
SHOWING CURB TRANSITION
WELDED AND SEALED GRATE

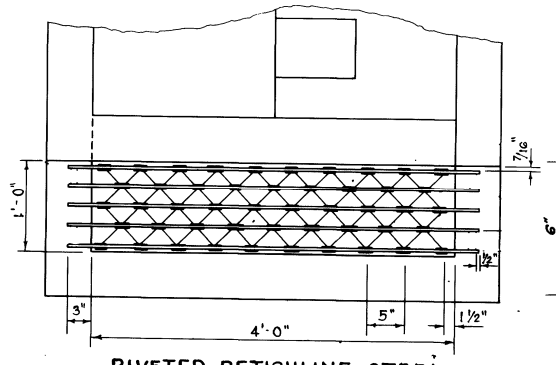

RIVETED RETICULINE STEEL GRATE (ALTERNATE)
WEIGHT OF DRAIN GRATE = 173 LBS. ± 5%

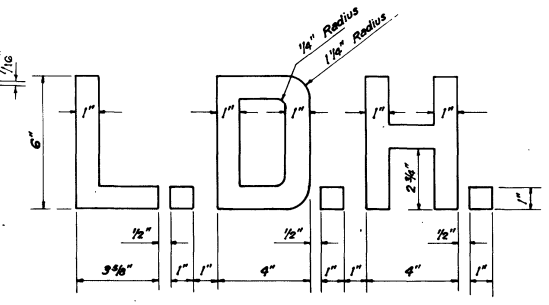

DETAILS OF LETTERS ON CAST IRON COVER

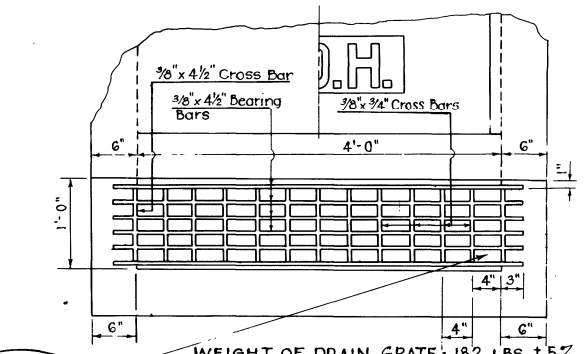

WEIGHT OF DRAIN GRATE = 182 LBS. ± 5%
WELDED AND SEALED STEEL GRATE

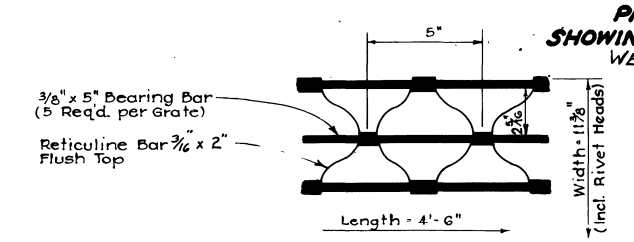

DETAIL OF RIVETED RETICULINE GRATE (ALTERNATE)

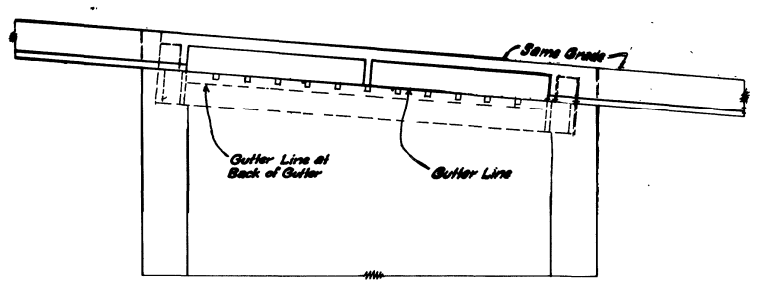

PART ELEVATION
SHOWING CATCH BASIN ON GRADE

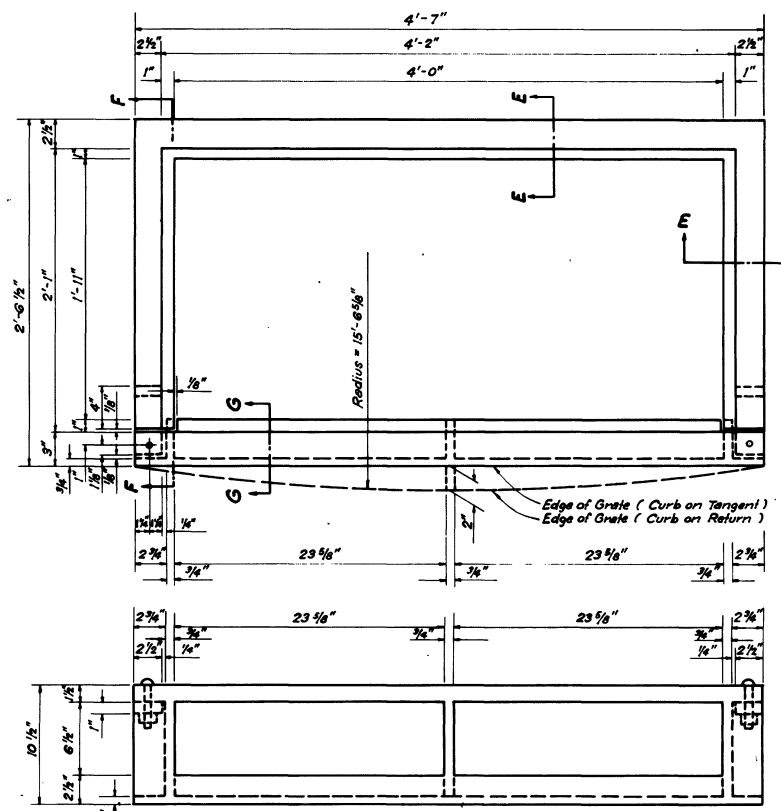

FRONT ELEVATION
DETAILS OF CAST IRON FRAME AND GRATE
Weight of Cast Iron Frame = 129 Lbs.
Weight of Cast Iron Grate = 160 Lbs.

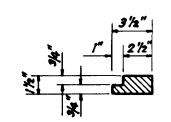

SECTION E-E

SECTION G-G

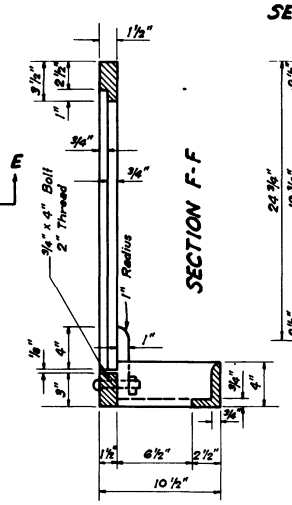

SECTION F-F

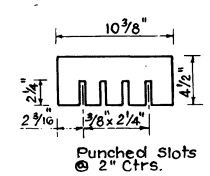

Punched Slots @ 2" Ctrs.
3/8" x 4½" END CROSS BAR (2 Req'd PER GRATE)
WELDED AND SEALED STEEL GRATE

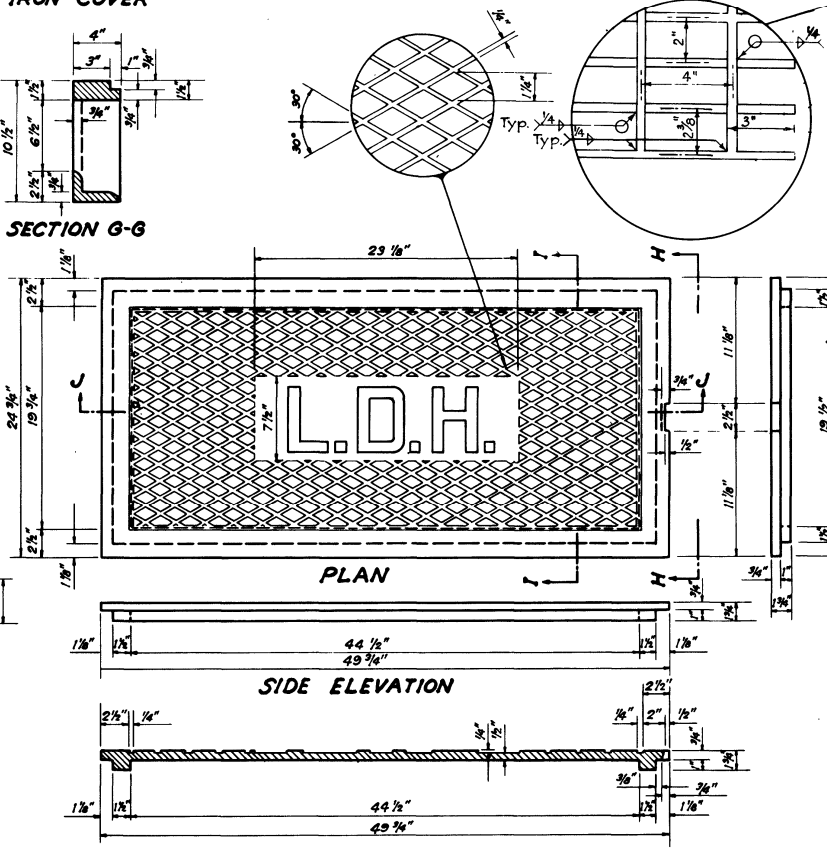

SECTION J-J
DETAILS OF CAST IRON COVER
Weight = 268 Lbs.

GENERAL NOTE:
Weld Full Depth.
Seal after Strength Weld is Completed.

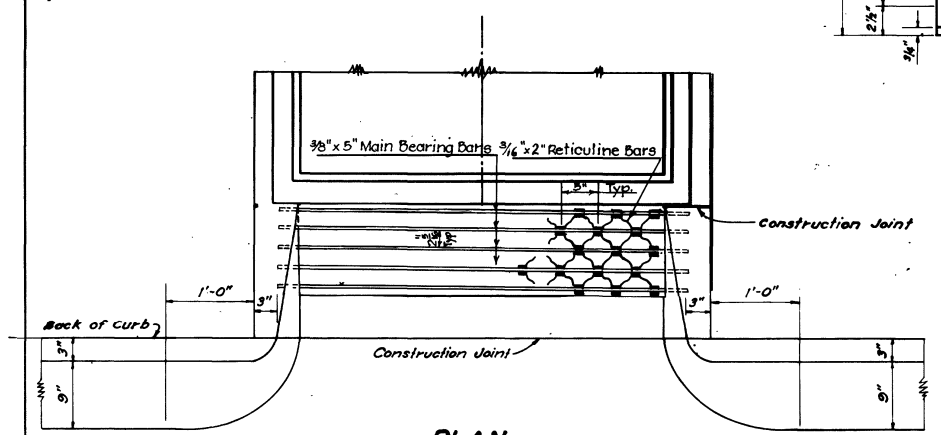

PLAN
SHOWING CURB TRANSITION
(RIVETED RETICULINE GRATE ALTERNATE SHOWN)

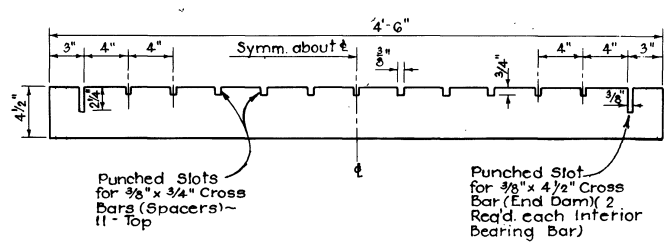

3/8" x 4½" BEARING BAR (6 Req'd per Grate)
4 INTERIOR BARS SLOTTED; 2 EXTERIOR BARS NOT SLOTTED
WELDED AND SEALED STEEL GRATE

Note: Castings to be A.S.T.M. Class 30
Note:
The Contractor will not pour above the bottom of the Slab until the paving adjacent to the Basin has been completed.

NOTE: ALL STEEL GRATES TO BE GALVANIZED

R-CB-24

STANDARD PLAN
R.C. CATCH BASIN
CURB AND GUTTER GRATE
8" CURB EXPOSURE
(CONSTRUCTED OUTSIDE OF PAVEMENT)
DATED ... Oct. ... 1952

STATE OF LOUISIANA
DEPARTMENT OF HIGHWAYS

DATE	DESCRIPTION	BY
4-6-76	Note on Pouring Sequence	W.T.J.
7-20-73	Added Note for Bar Size	W.E.M.
6-10-71	Revised Gutter Grate	W.E.M.

REVISIONS

DESIGNED — DETAILED O.A.H. — TRACED A.W.
CHECKED — CHECKED W.E.M. — CHECKED W.E.M.
IN CHARGE OF

R-CB-24
SHEET 2 OF 2 SHEETS